Installer manual

NIBE™ F2300

Air/water heat pump

IHB GB 1540-3
231141

Table of Contents

1 Important information

Safety information

This manual describes installation and service procedures for implementation by specialists.

This appliance is designed for use in a home environment and not intended to be used by persons (including children) with reduced physical, sensory or mental capabilities, or lack of experience and knowledge, unless they have been given supervision or instruction concerning use of the appliance by a person responsible for their safety. This in accordance to applicable parts of the low-voltage directive 2006/95/EC, LVD. The appliance is also intended for use by experts or trained users in shops, hotels, light industry, on farms and in similar environments. This in accordance to applicable parts of the machinery directive 2006/42/EC.

Children should be supervised to ensure that they do not play with the appliance.

This is an original instruction manual. Translation is not allowed without approval from NIBE.

Rights to make any design or technical modifications are reserved.

Symbols

NOTE

This symbol indicates danger to machine or person.

Caution

This symbol indicates important information about what you should observe when maintaining your installation.

TIP

This symbol indicates tips on how to facilitate using the product.

Marking

The CE marking means that NIBE ensures that the product meets all regulations that are placed on it based on relevant EU directives. The CE mark is obligatory for most products sold in the EU, regardless where they are made.

Safety precautions

Caution

Install the system in full accordance with this installation manual.
Incorrect installation can cause bursts, personal injury, water leaks, refrigerant leaks, electric shocks and fire.

Observe the measurement values before working on the cooling system, especially when installing in small rooms, so that the limit for the refrigerant's density is not exceeded.
Consult an expert to interpret the measurement values. If the refrigerant density exceeds the limit, lack of oxygen can occur in the event of any leak, which can cause serious accidents.

Use original accessories and the stated components for the installation.
If parts other than those stated by us are used, water leaks, electric shocks, fire and personal injury may occur as the unit may not work properly.

Ventilate the working area well – refrigerant leakage may occur during service work.
If the refrigerant comes into contact with naked flames, poisonous gas is created.

Install the unit in a location with good support.
Unsuitable installation locations can cause the unit to fall and cause material damage and personal injury. Installation without sufficient support can also cause vibrations and noise.

Ensure that the unit is stable when installed, so that it can withstand earthquakes and strong winds.
Unsuitable installation locations can cause the unit to fall and cause material damage and personal injury.

The electrical installation must be carried out by a qualified electrician and the system must be connected as a separate circuit.
Power supply with insufficient capacity and incorrect function can cause electric shocks and fire.

Use the stated cables for the electrical connection, tighten the cables securely in the terminal blocks and relieve the wiring correctly to prevent overloading the terminal blocks.
Loose connections or cable mountings can cause abnormal heat production or fire.

Check, after completed installation or service, that no refrigerant leaks from the system in gas form.
If refrigerant gas leaks into the house and comes into contact with an aerotemp, an oven or other hot surface, poisonous gases are produced.

Switch off the compressor before opening/breaching the refrigerant circuit.
If the refrigerant circuit is breached /opened whilst the compressor is running, air can enter the process circuit. This can cause unusually high pressure in the process circuit, which can cause bursts and personal injury.

Switch off the power supply in the event of a service or inspection.
If the power supply is not shut off, there is a risk of electric shocks and damage due to the rotating fan.

Do not run the unit with removed panels or protection.
Touching rotating equipment, hot surfaces or high voltage parts can cause personal injury due to entrapment, burns or electric shocks.

Cut the power before starting electrical work.
Failure to cut the power can cause electric shocks, damage and incorrect function of the equipment.

Care

Carry out the electrical installation with care.
Do not connect the ground lead to the gas line, water line, lightning conductor or telephone line's ground lead. Incorrect grounding can cause unit faults such as electric shocks due to short-circuiting.

Use main switch with sufficient breaking capacity.
If the switch does not have sufficient breaking capacity, malfunctions and fire can occur.

Always use a fuse with the correct rating in the locations where fuses are to be used.
Connecting the unit with copper wire or other metal thread can cause unit breakdown and fire.

Cables must be routed so that they are not damaged by metal edges or trapped by panels.
Incorrect installation can cause electric shocks, heat generation and fire.

Do not install the unit in close proximity to locations where leakage of combustible gases can occur.
If leaking gases collect around the unit, fire may occur.

Do not install the unit where corrosive gas (for example nitrous fumes) or combustible gas or steam (for example thinner and petroleum gases) can build up or collect, or where volatile combustible substances are handled.
Corrosive gas can cause corrosion to the heat exchanger, breaks in plastic parts etc. and combustible gas or steam can cause fire.

Do not use the unit where water splashes may occur, for example in laundries.
The indoor section is not waterproof and electric shocks and fire can therefore occur.

Do not use the unit for specialist purposes such as for storing food, cooling precision instruments, freeze-conservation of animals, plants or art.
This can damage the items.

Do not install and use the system close to equipment that generates electromagnetic fields or high frequency harmonics.
Equipment such as inverters, standby sets, medical high frequency equipment and telecommunications equipment can affect the unit and cause malfunctions and breakdowns. The unit can also affect medical equipment and telecommunications equipment, so that it functions incorrectly or not at all.

Do not install the outdoor unit in the locations stated below.
- Locations where leakage of combustible gas can occur.
- Locations where carbon fibre, metal powder or other powder that can enter the air.
- Locations where substances that can affect the unit, for example, sulphide gas, chlorine, acid or alkaline substances can occur.
- Locations with direct exposure to oil mist or steam.
- Vehicles and ships.
- Locations where machines that generate high frequency harmonics are used.
- Locations where cosmetic or special sprays are often used.
- Locations that can be subjected to direct salty atmospheres. In this case, the outdoor unit must be protected against direct intakes of salty air.
- Locations where large amounts of snow occur.
- Locations where the system is exposed to chimney smoke.

If the bottom frame of the outdoor section is corroded, or in any other way damaged, due to long periods of operation, it must not be used.
Using an old and damaged frame can cause the unit to fall and cause personal injury.

If soldering near the unit, ensure that solder residue does not damage the drip tray.
If solder residue enters the unit during soldering, small holes can appear in the tray resulting in water leakage. To prevent damage, keep the indoor unit in its packing or cover it.

Do not allow the drainage pipe to exit into channels where poisonous gases, containing sulphides for example, can occur.
If the pipe exits into such a channel, any poisonous gases will flow into the room and seriously affect the user's health and safety.

Insulate the unit's connection pipes so that the ambient air moisture does not condense on them.
Insufficient insulation can cause condensation, which can lead to moisture damage on the roof, floor, furniture and valuable personal property.

Do not install the outdoor unit in a location where insects and small animals can inhabit.

Insects and small animals can enter the electronic parts and cause damage and fire. Instruct the user to keep the surrounding equipment clean.

Take care when carrying the unit by hand.
If the unit weights more than 20 kg, it must be carried by two people. Use gloves to minimize the risk of cuts.

Dispose of any packaging material correctly.
Any remaining packaging material can cause personal injury as it may contain nails and wood.

Do not touch any buttons with wet hands.
This can cause electric shocks.

Do not touch any refrigerant pipes with your hands when the system is in operation.
During operation the pipes become extremely hot or extremely cold, depending on the method of operation. This can cause burn injuries or frost injuries.

Do not shut off the power supply immediately after operation has start.
Wait at least 5 minutes, otherwise there is a risk of water leakage or breakdown.

Do not control the system with the main switch.
This can cause fire or water leakage. In addition, the fan can start unexpectedly, which can cause personal injury.

Especially for units intended for R407C

- Do not use other refrigerants that those intended for the unit.

- Do not use charging bottles. These types of bottles change the composition of the refrigerant, which makes the performance of the system worse.

- When filling refrigerant, the refrigerant must always leave the bottle in liquid form.

Serial number

The serial number can be found at the top left of the rear cover and on the foot of the product.

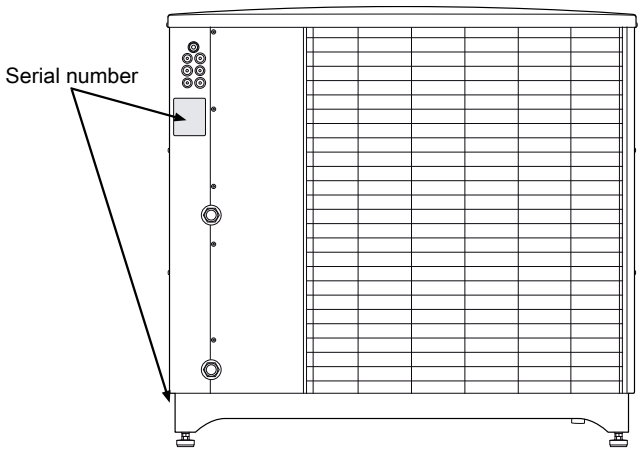

Caution

Always give the product's serial number when reporting a fault.

Country specific information

Installer manual

This installer manual must be left with the customer.

Inspection of the installation

Current regulations require the heating installation to be inspected before it is commissioned. The inspection must be carried out by a suitably qualified person. Fill in the page for information about installation data in the User manual.

✔	Description	Notes	Signature	Date
Heating medium (page 15)				
	System flushed			
	System vented			
	Particle filter			
	Shut-off and drain valve			
	Charge flow set			
Electricity (page 17)				
	Fuses property			
	Safety breaker			
	Earth circuit-breaker			
	Heating cable type/effect			
	Fuse size, heating cable (F3)			
	Communication cable connected			
Miscellaneous				
	Condensation water pipe			
	Insulation condensation water pipe, thickness (if KVR 10 is not used)			

Contact information

AT **KNV Energietechnik GmbH**, Gahberggasse 11, 4861 Schörfling
Tel: +43 (0)7662 8963-0 Fax: +43 (0)7662 8963-44 E-mail: mail@knv.at www.knv.at

CH **NIBE Wärmetechnik c/o ait Schweiz AG**, Industriepark, CH-6246 Altishofen
Tel: (52) 647 00 30 Fax: (52) 647 00 31 E-mail: info@nibe.ch www.nibe.ch

CZ **Druzstevni zavody Drazice s.r.o**, Drazice 69, CZ - 294 71 Benatky nad Jizerou
Tel: +420 326 373 801 Fax: +420 326 373 803 E-mail: nibe@nibe.cz www.nibe.cz

DE **NIBE Systemtechnik GmbH**, Am Reiherpfahl 3, 29223 Celle
Tel: 05141/7546-0 Fax: 05141/7546-99 E-mail: info@nibe.de www.nibe.de

DK **Vølund Varmeteknik A/S**, Member of the Nibe Group, Brogårdsvej 7, 6920 Videbæk
Tel: 97 17 20 33 Fax: 97 17 29 33 E-mail: info@volundvt.dk www.volundvt.dk

FI **NIBE Energy Systems OY**, Juurakkotie 3, 01510 Vantaa
Puh: 09-274 697 0 Fax: 09-274 697 40 E-mail: info@nibe.fi www.nibe.fi

FR **NIBE Energy Systems France Sarl,** Zone industrielle RD 28, Rue du Pou du Ciel, 01600 Reyrieux
Tel : 04 74 00 92 92 Fax : 04 74 00 42 00 E-mail: info@nibe.fr www.nibe.fr

GB **NIBE Energy Systems Ltd**, 3C Broom Business Park, Bridge Way, Chesterfield S41 9QG
Tel: 0845 095 1200 Fax: 0845 095 1201 E-mail: info@nibe.co.uk www.nibe.co.uk

NL **NIBE Energietechniek B.V.**, Postbus 634, NL 4900 AP Oosterhout
Tel: 0168 477722 Fax: 0168 476998 E-mail: info@nibenl.nl www.nibenl.nl

NO **ABK AS**, Brobekkveien 80, 0582 Oslo, Postadresse: Postboks 64 Vollebekk, 0516 Oslo
Tel. sentralbord: +47 23 17 05 20 E-mail: post@abkklima.no www.nibeenergysystems.no

PL **NIBE-BIAWAR Sp. z o. o.** Aleja Jana Pawła II 57, 15-703 BIAŁYSTOK
Tel: 085 662 84 90 Fax: 085 662 84 14 E-mail: sekretariat@biawar.com.pl www.biawar.com.pl

RU © **"EVAN"** 17, per. Boynovskiy, Nizhny Novgorod
Tel./fax +7 831 419 57 06 E-mail: info@evan.ru www.nibe-evan.ru

SE **NIBE AB Sweden**, Box 14, Hannabadsvägen 5, SE-285 21 Markaryd
Tel: +46-(0)433-73 000 Fax: +46-(0)433-73 190 E-mail: info@nibe.se www.nibe.se

For countries not mention in this list, please contact Nibe Sweden or check www.nibe.eu for more information.

2 Delivery and handling

Transport and storage

F2300 must be transported and stored vertically.

> **NOTE**
> Ensure that the heat pump cannot fall over during transport.

Assembly

- Place F2300 outdoors on a solid level base that can take the weight, preferably a concrete foundation. If concrete slabs are used they must rest on asphalt or shingle.
- The concrete foundation or slabs must be positioned so that the lower edge of the evaporator is at the level of the average local snow depth, although a minimum of 300 mm.
- F2300 should not be positioned next to noise sensitive walls, for example, next to a bedroom.
- Also ensure that the placement does not inconvenience the neighbours.
- F2300 must not be placed so that recirculation of the outdoor air can occur. This causes lower output and impaired efficiency.
- The evaporator should be sheltered from direct wind, which negatively affects the defrosting function. Place F2300 protected from wind against the evaporator.
- Large amounts of condensation water as well as melt water from defrosting can be produced. Condensation water must be led off to a drain or similar (see page 8).
- Care must be exercised so that the heat pump is not scratched during installation.

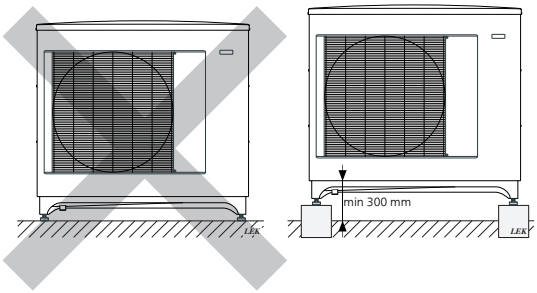

Do not place F2300 directly on the lawn or other non solid surface.

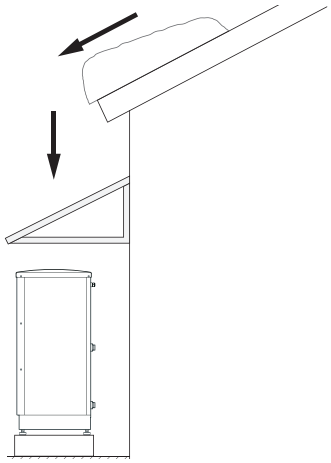

If there is a risk of snow slip from roof, a protective roof or cover must be erected to protect the heat pump, pipes and wiring.

Lift from the street to the set up location

If the base allows, the simplest thing is to use a pallet truck to move the F2300 to the set up location.

NOTE

The centre of gravity is offset to one side (see print on the packaging).

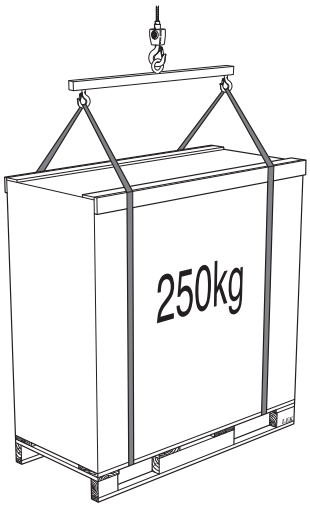

If F2300 must be transported across soft ground, for example a lawn, we recommend that a crane that can lift it to the set up location is used. When the F2300 is lifted by crane the packaging must be untouched and the load equally distributed with a boom, as illustrated above.

If a crane cannot be used F2300 can be transported using an extended sack truck. F2300 must be used on the side marked "heavy side" and two people are required to get the F2300 up.

Lift from the pallet to final positioning

Before lifting remove the packaging and the securing strap to the pallet.

Place lifting straps around each machine foot. Lifting from the pallet to the base requires four persons, one for each lifting strap.

It is not permitted to lift anything other than the machine feet.

Scrapping

When scrapping, the product is removed in reverse order. Lift by the bottom panel instead of a pallet!

Condensation water trough

The condensation water trough is used to collect and lead away condensation water from the heat pump.

NOTE

It is important to the heat pump function that condensation water is led away and that the drain for the condensation water run off is not positioned so that it can cause damage to the house.

NOTE

Pipe with heating cable for draining the condensation water trough is not included.

NOTE

To ensure this function the accessory KVR 10 should be used.

NOTE

The electrical installation and wiring must be carried out under the supervision of an authorised electrician.

Caution

If none of the recommended alternatives is used good lead off of condensation water must be assured.

- The condensation water (up to 100 litres/day) collected in the trough should be routed by pipe to an appropriate drain, it is recommended that the shortest outdoor stretch possible is used.
- The section of the pipe that can be affected by frost must be heated by the heating cable to prevent freezing.
- Route the pipe downward from F2300.
- The outlet of the condensation water pipe must be at a depth that is frost free or alternatively indoors (with reservation for local ordinances and regulations).
- Use a water trap for installations where air circulation may occur in the condensation water pipe.
- The insulation must be tight against the bottom of the condensation water trough.

Recommended alternatives

Stone caisson

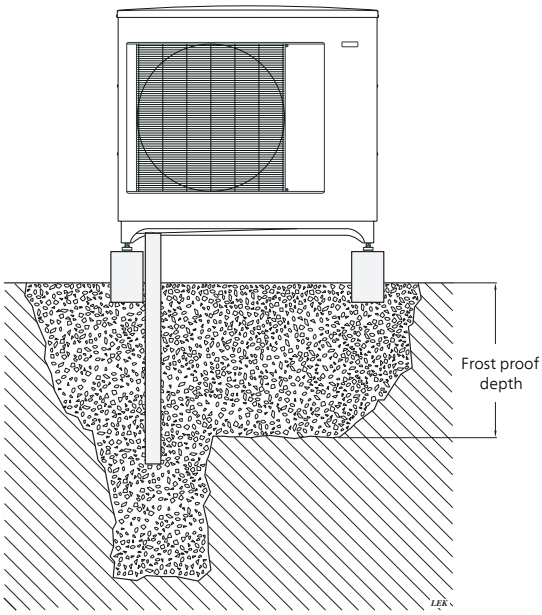

If the house has a cellar the stone caisson must be positioned so that condensation water does not affect the house. Otherwise the stone caisson can be positioned directly under the heat pump.

The outlet of the condensation water pipe must be at frost free depth.

Drain indoors

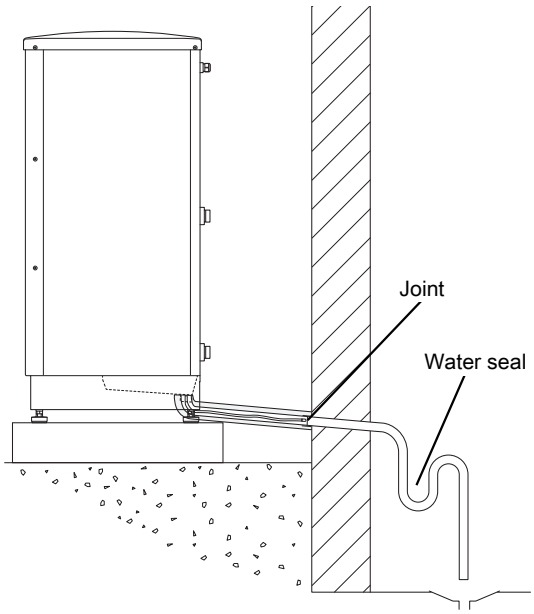

The condensation water is lead to an indoor drain (subject to local rules and regulations).

Route the pipe downward from F2300.

The condensation water pipe must have a water seal to prevent air circulation in the pipe.

Gutter drainage

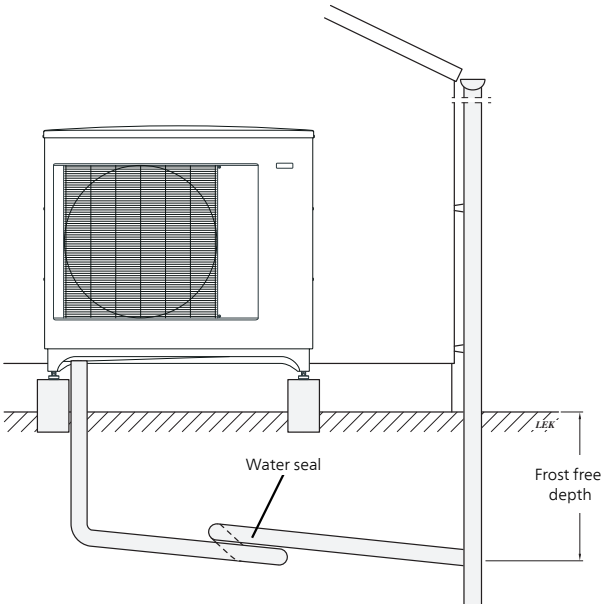

The outlet of the condensation water pipe must be at frost free depth.

Route the pipe downward from F2300.

The condensation water pipe must have a water seal to prevent air circulation in the pipe.

Installation area

The distance between F2300 and the house wall must be at least 400 mm. Clearance above the F2300 should be at least one metre.

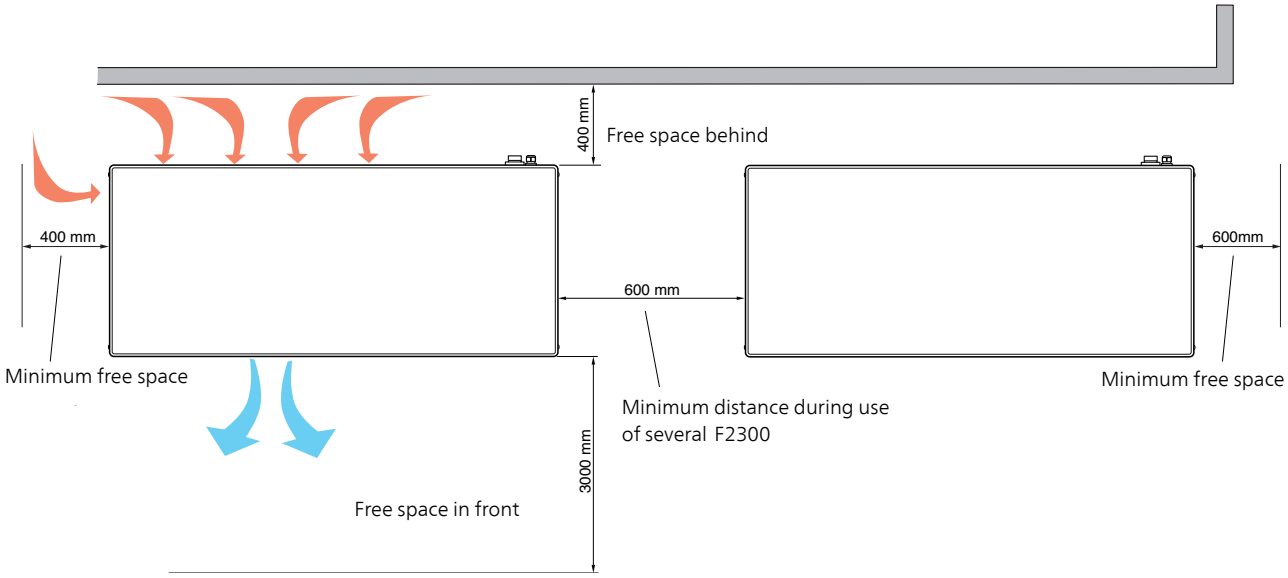

Supplied components

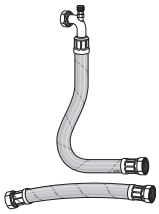

2 flexible hoses (R32) with 4 gaskets

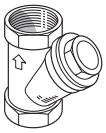

Particle filterR32

Removing the side cover

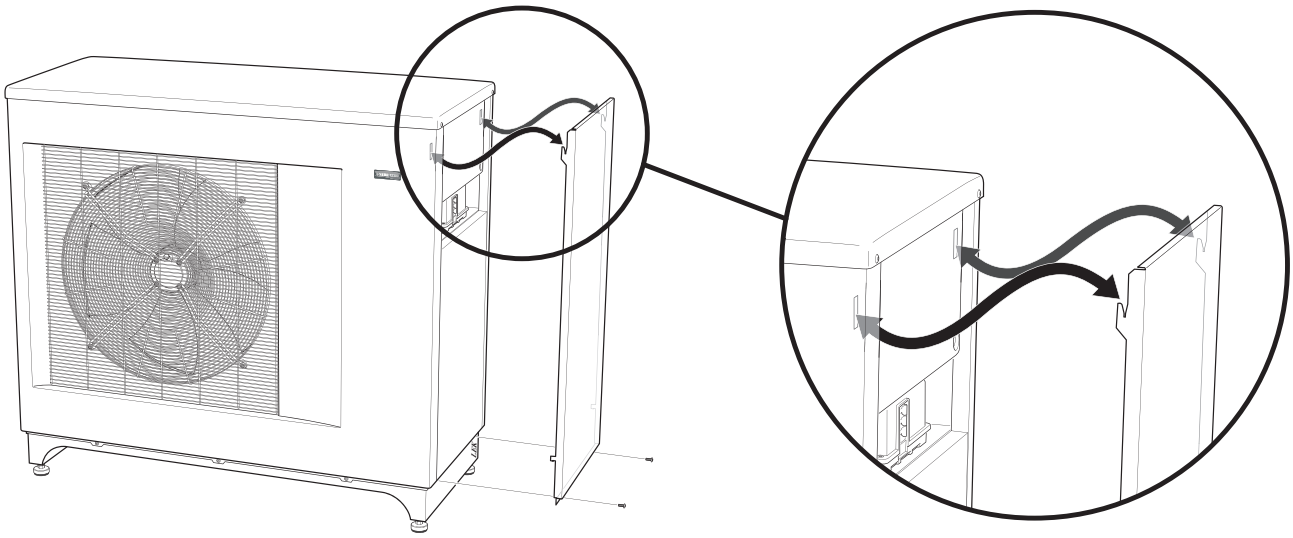

3 The heat pump design

General

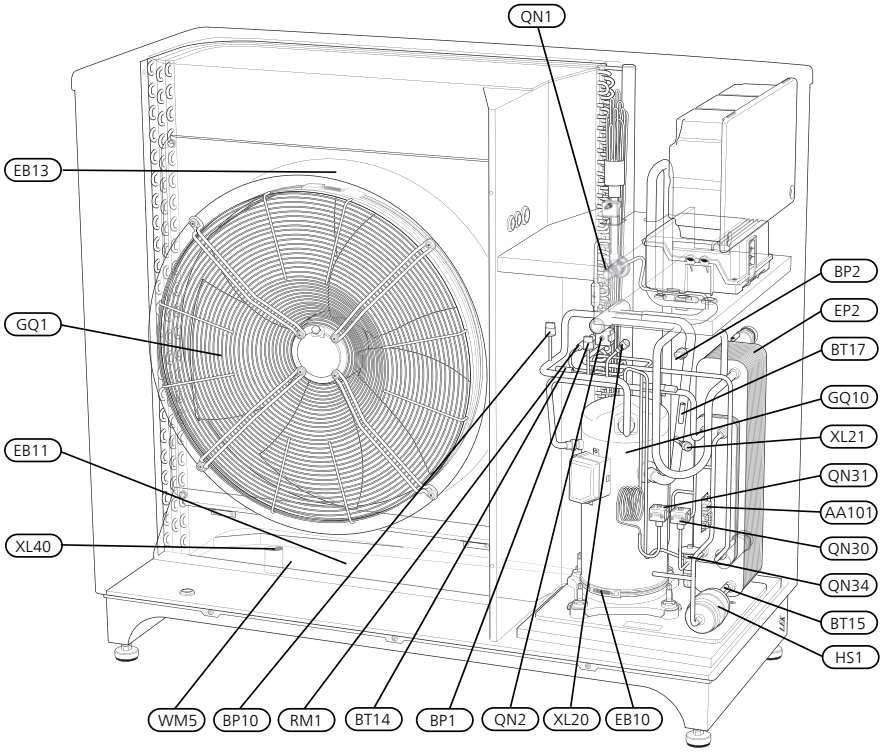

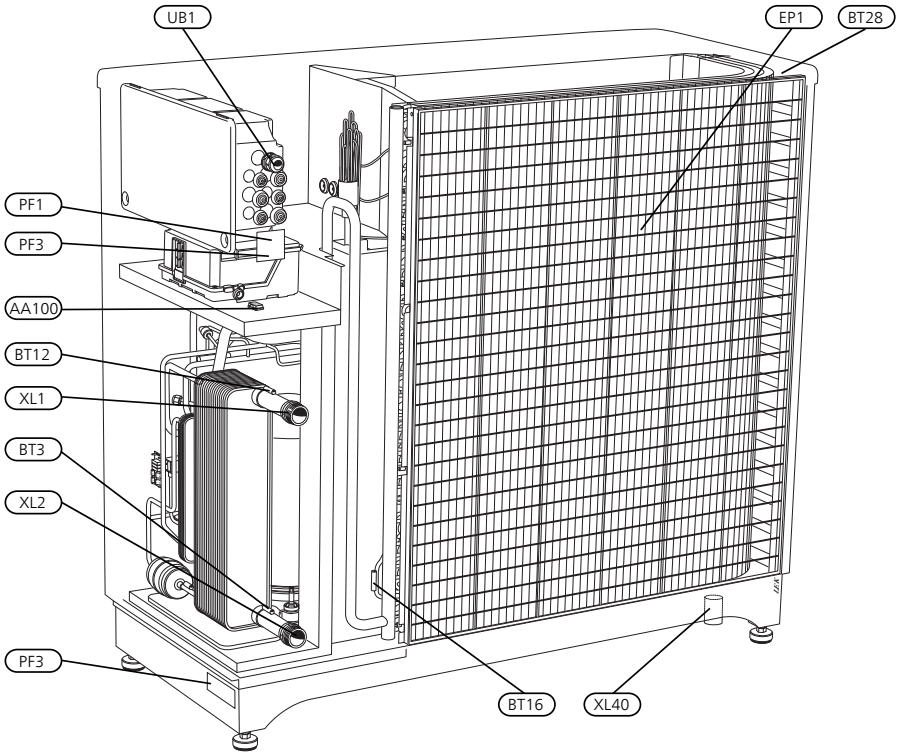

Pipe connections

XL1	Connection, heating medium out of F2300
XL2	Connection, heating medium in to F2300,
XL20	Service connection, high pressure
XL21	Service connection, low pressure
XL40	Connection, drain condensation water trough

Sensors etc.

BP1	High pressure pressostat
BP2	Low pressure pressostat
BP10	High pressure pressostat
BT3	Temperature sensor, return
BT12	Temperature sensor, condenser supply line
BT14	Temperature sensor, hot gas
BT15	Temperature sensor, fluid pipe
BT16	Temperature sensor, evaporator
BT17	Temperature sensor, suction gas
BT28	Temperature sensor, ambient

Electrical components

AA100	Joint card, sensor
AA101	Joint card
EB10	Compressor heater
EB11	Condensation water trough heater
EB13	Collar heater
GQ1	Fan

Cooling components

EP1	Evaporator
EP2	Condenser
GQ10	Compressor
HS1	Drying filter
QN1	Expansion valve
QN2	4-way valve
QN30	Solenoid valve, liquid injection
QN31	Solenoid valve, subcooling
QN34	Expansion valve, subcooling
RM1	Non-return valve

Miscellaneous

PF1	Type plate
PF3	Serial number
UB1	Cable gland, incoming supply
WM5	Condensation water trough

Designations in component locations according to standard IEC 81346-1 and 81346-2.

Electrical cabinet

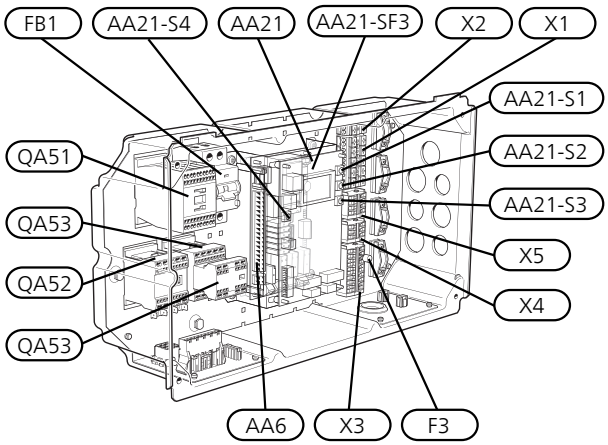

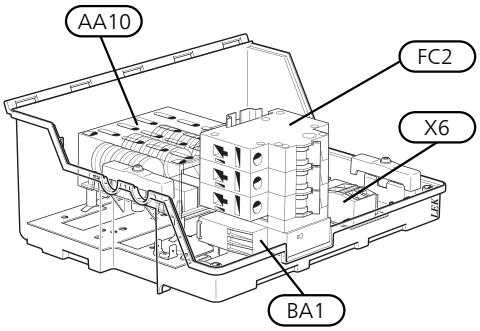

Electrical components

AA6	Relay card with power supply unit	
AA10	Soft-start relay	
AA21	Control card with display	
	S 1	Plus button
	S 2	Minus button
	S 3	Enter button
	S 4	Reset button
	SF 3	Display contrast
BA1	Phase sequence monitor (3-phase)	
F3	Fuse for external heating cable (250 mA)	
FB1	Automatic protection (10 A/30 mA)	
FC2	Motor fuse	
QA51	Contactor, main contactor, fan	
QA52	Contactor, low speed fan	
QA53	Contactor, high speed fan	
X1	Terminal block, incoming supply	
X2	Terminal block, external supply	
X3	Terminal block, charge pump, external heater	
X4	Terminal block, common alarm	
X5	Terminal block, thermostat, compressor blocking	
X6	Terminal block	

Designations in component locations according to standard IEC 81346-1 and 81346-2.

4 Pipe connections

General

Pipe installation must be carried out in accordance with current norms and directives.

F2300 can only operate up to a return temperature of about 55 °C and an outgoing temperature of about 65 °C from the heat pump.

F2300 is not equipped with external shut off valves on the water side; these must be installed to facilitate any future servicing. The return temperature is limited by the return line sensor.

Water volumes

When docking with F2300 a minimum available system volume of at least 20 litres per kW output on the heat pump is recommended.

> **NOTE**
> The pipe work must be flushed before the heat pump is connected, so that any contaminants do not damage the components.

Pipe coupling heating medium circuit

- F2300 can be connected to the heating system according to one of the system solutions that can be downloaded from the website www.nibe.eu.
- The heat pump must be vented by the upper connection (XL1) using the venting nipple on the enclosed flexible hose.
- Install the supplied particle filter before the inlet, i.e. the lower connection (XL2) on F2300.
- All outdoor pipes must be thermally insulated with at least 19mm thick pipe insulation.
- Install shutoff and drain valves so that F2300 can be emptied in the event of prolonged power failures.
- The supplied flexible hoses act as vibration dampers. The flexible pipes are fitted so an elbow is created, thus acting as vibration damping.

Charge pump

The temperature is controlled by the thermostat (VT 10), the charge pump is controlled directly from F2300, terminal block (X3). If there is a risk of freezing the charge pump will be activated by the heat pump control. Alternatively, the heat pump is connected to an intermediate circuit consisting of a heat exchanger, pump and water with anti-freeze. (Does not apply when docking to NIBE indoor module.)

> **NOTE**
> If the charge pump is controlled externally it must be operational, even if F2300 is not running, to prevent damage due to freezing.

Pressure drop, heating medium side

F2300 -14, 20

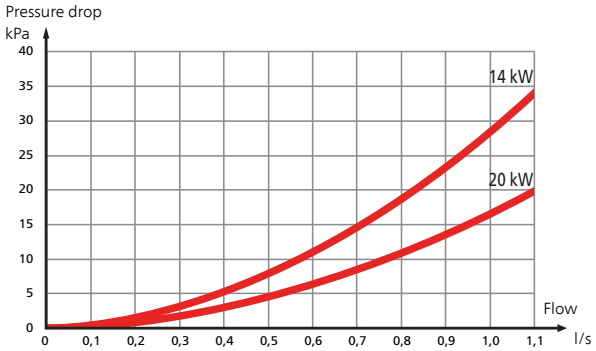

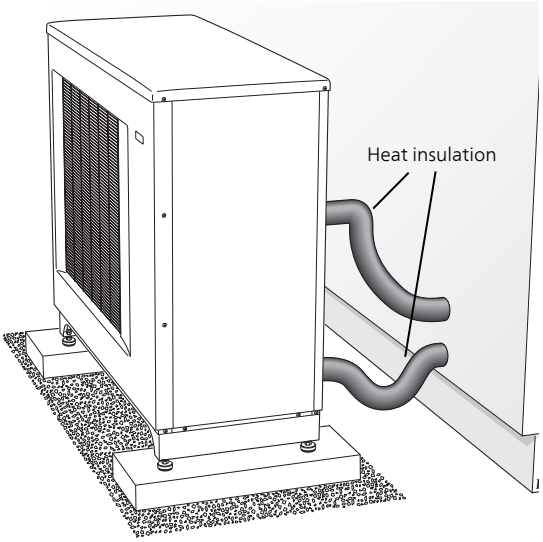

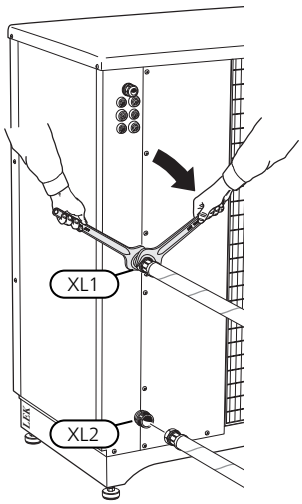

Docking alternatives

F2300 can be installed in several different ways, for example with integrated or external control. The safety equipment must be installed in accordance with current regulations for all docking options.

See www.nibe.eu for more docking options.

When docking with F2300 a minimum available system volume of at least 20 litres per kW output on the heat pump is recommended.

5 Electrical connections

General

- A heat pump must not be connected without the permission of the electricity supplier and must be connected under the supervision of a qualified electrician.
- If a miniature circuit breaker is used this should have motor characteristic "C" (compressor operation). For MCB size see "Technical Specifications".
- F2300 does not include an omnipolar circuit breaker on the incoming power supply. The heat pump's supply cable must be connected to a circuit-breaker with at least a 3 mm breaking gap. When the building is equipped with an earth-fault breaker the heat pump should be equipped with a separate one. Incoming supply must be 400 V 3NAC 50Hz via distribution boards with fuses.
- If an insulation test is to be carried out in the building, disconnect the heat pump.
- Connect control signal cable for thermostat to terminal (X5). Cable type: unscreened LiYY, screened LiYCY. Cable area, at least 0.22with cable lengths less than 50m.
- Alternatively the relevant screened signal cable is connected from terminal block (AA21:J2) to the indoor module from NIBE.
- The routing of cables for heavy current and signals should be made out through the cable glands on the heat pump's right-hand side, seen from the front.
- Charge pump for F2300 can be connected to separate supply or to terminal block (X3).
  NOTE! If F2300 is not powered and the charge pump is connected to the terminal block (X3) there is a risk of freezing
- A common alarm can be connected to terminal (X4).

> **NOTE**
> Electrical installation and service must be carried out under the supervision of a qualified electrician. Electrical installation and wiring must be carried out in accordance with the stipulations in force.

> **NOTE**
> The live external control must be taken into consideration when connecting.

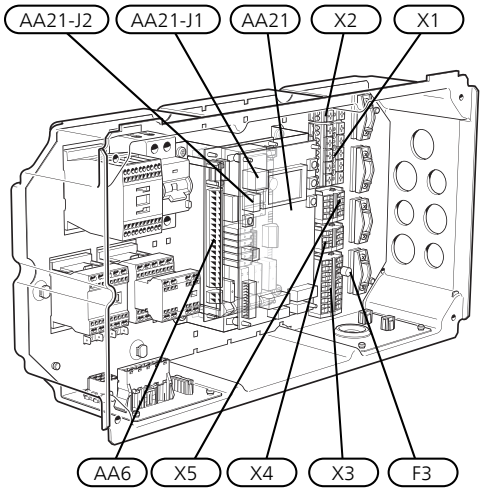

Accessibility, electrical connection

> **NOTE**
> The door is opened using a Torx 25 screwdriver.

Removing electrical cabinet

Unscrew the screws and lift off the cover.

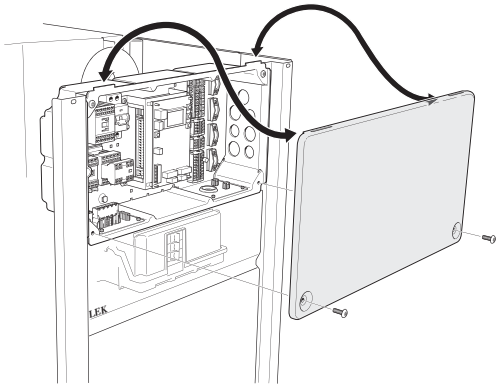

Dismantling motor electrical cabinet

Unscrew the screws and lift off the cover.

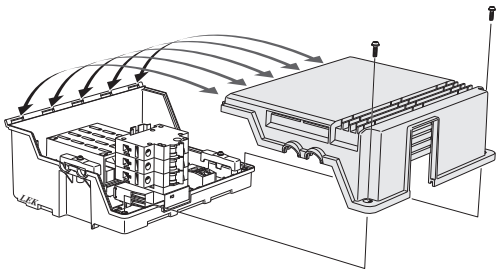

Connections

NOTE

To prevent interference, unscreened communication and/or sensor to external connections cables must not be laid closer than 20 cm to high voltage cable when cable routing.

Power connection

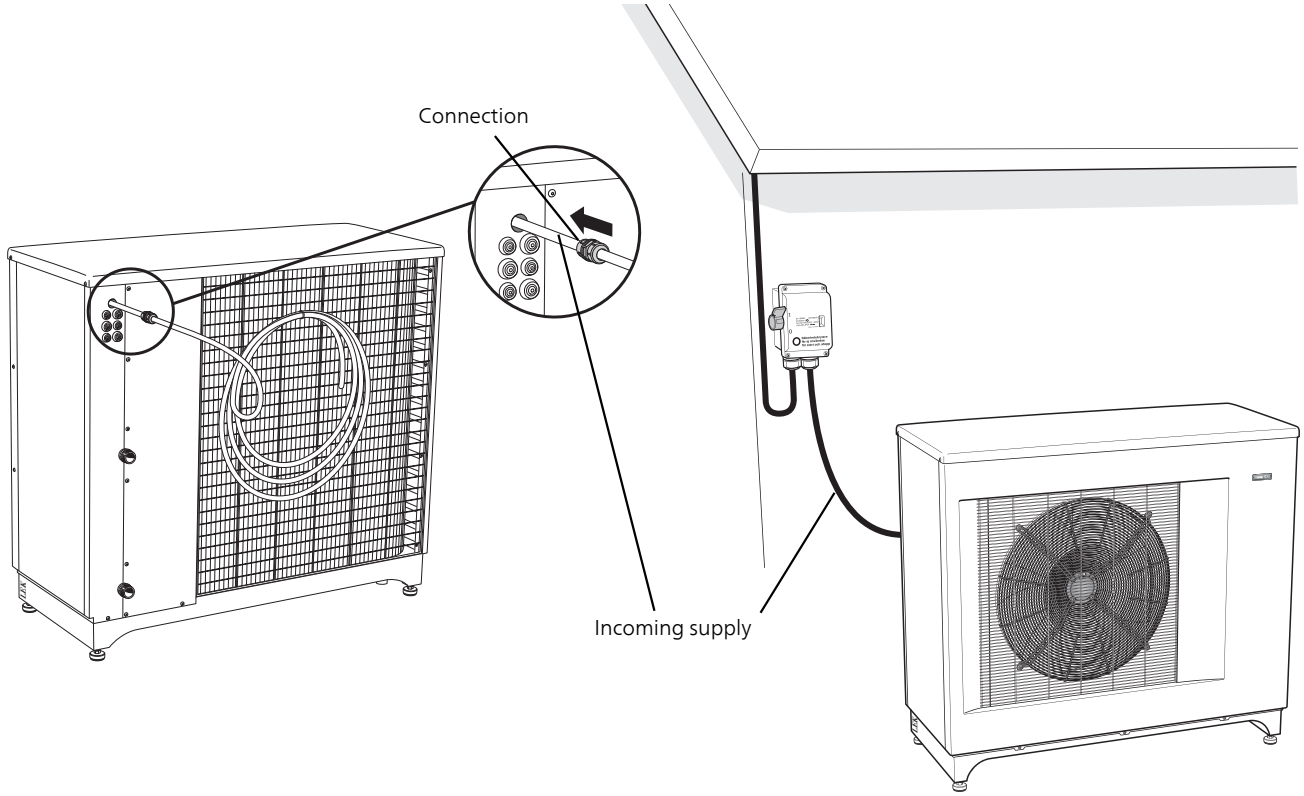

Incoming supply cable is supplied and factory connected to the terminal block -X1. Approx. 1.8 m cable is accessible outside the heat pump.

On installation the unions must be mounted on the rear of the heat pump.

Connecting external control voltage

NOTE

Mark up any junction boxes with warnings for external voltage.

When connecting external control voltage with separate earth-fault breaker disconnect the cables between terminal blockX1:N and X2:N and between terminal block X1:L1 and X2:L1 (as illustrated).

Operating voltage (1x230V+N+PE) is connected to X2:N and X2:L1 (as illustrated).

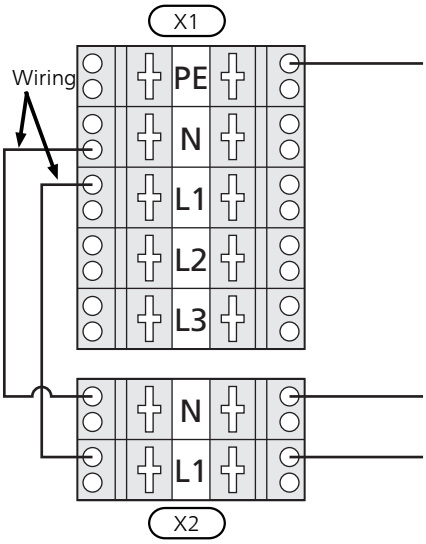

At connection of external control voltage you must connect a switch (for tariff control) to connection X5:1 and X5:2 (compressor blocking) to prevent MP alarm.

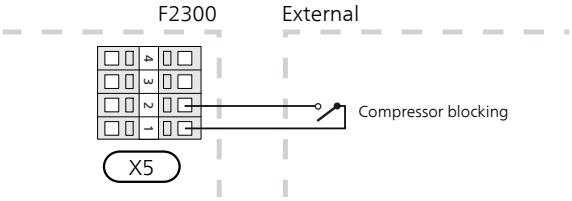

Charge pump

To let F2300 control the charge pump (GP12), connect it to the terminal block X3:1(PE), 3(L) and 4(N). Pump activity is dependent on the status of F2300, heating/hot water requirement and the ambient temperature. Pump exercising is handled by F2300.

With potential free connection of the circulation pump you replace the bracket with separate voltage supply for X3:2(L).

Anti-freeze function

At temperatures below +2 °C the charger pump runs periodically, to prevent the water from freezing in the charge circuit. The function also protects against excess temperatures in the charge circuit. This function applies on the condition that F2300 is powered.

NOTE

There is a risk of freezing when the charge pump is connected to the terminal block - X3 and F2300 is not powered.

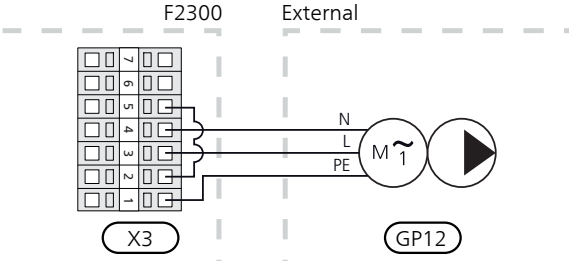

External heating cable (KVR 10)

F2300 is equipped with a plinth for external heating cable EB14, not supplied). The connection is fused with 250 mA (F3, 15 W/m). If another cable is to be used the fuse must be replaced with a suitable one.

Length (m)	Total output (W)	Fuse (F3)	NIBE Part no.
1	15	T100mA/250V	718085
3	45	T250mA/250V	518900*
6	90	T500mA/250V	718086

* Fitted at the factory.

Connect external heating cable (EB14) to terminal block X3:4 and 7. If there is a ground cable connect it to X3:1. See following image:

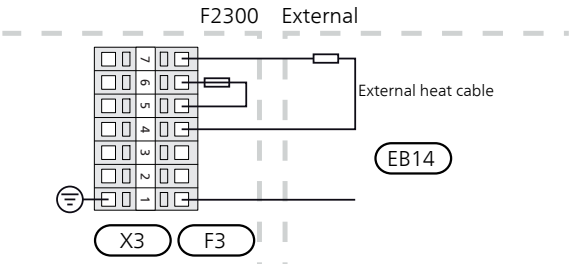

NOTE

The pipe must be able to withstand the heat from the heating cable.

To ensure this function the accessory KVR 10 should be used.

Cable routing

The following image displays the recommended cable routing from the junction box to the condensation water trough on the outside of F2300. The transfer from electrical cable to heating cable must occur after the lead-in to the condensation water trough. The distance between the junction box and the lead-in to the condensation water trough is approx.2600 mm.

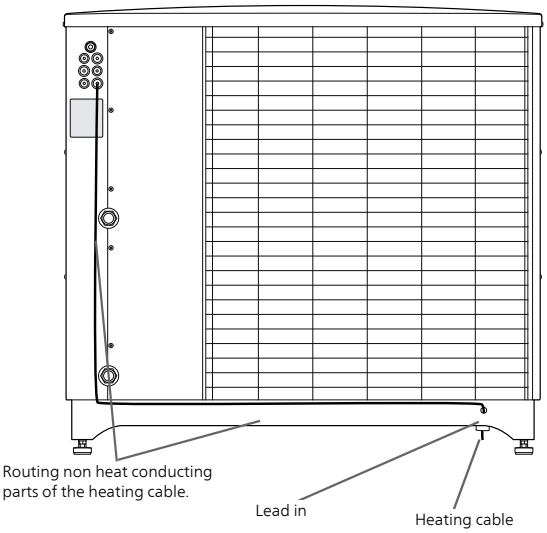

Optional connections

NOTE

The following pages about thermostats, additional heat, common alarms and downtime, do not apply when F2300 is controlled by a NIBE indoor module.

Thermostat control

You can use a basic thermostat or a closing potential-free contact to switch the compressor on and off. This thermostat should be of the breaking type (NC) when the set temperature has been reached. The contactor should be potential free.

Connect the thermostat to terminal block X5:3 and 4 as illustrated below.

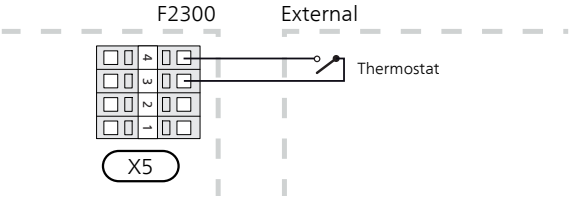

Additional heat / Downtime

F2300 is equipped with a potential free contactor intended for additional heat. Max 250V 2A.

The setting of the ambient temperature (balance temperature) when the additional relay is activated is made on channel A5, see the section "Control - Channel description".

External additional heat is connected via the additional relay terminal block J5:C,NO and NC on control card AA21.

Conditions for connecting additional heat:

- the ambient temperature should be lower than the set balance temperature (channel A5).
- The compressor must have been operating for the minimum period that can be set in channel A6. Defrosting is included in this time.

If the ambient temperature falls to a level below the set value, stop temperature (downtime), in channel A7 compressor operations are blocked and all heating must take place using the external additional heat via the downtime relay, terminal block J6:C,NO and NC on control card AA21. This function is also activated when F2300 is de-energized.

If the ambient temperature exceeds 40 °C compressor operation is blocked and the downtime relay is activated.

The connection to the additional relay is made as illustrated below.

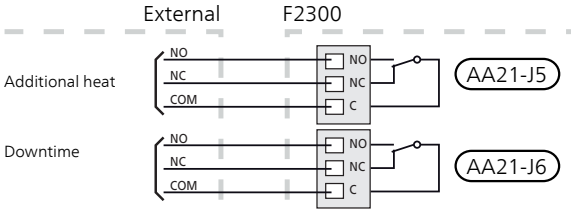

Max load across the relay contactors is 250V 2A.

During operations without the need of the additional heat or downtime the relay contactors are closed between COM and NO.

Additional heat and downtime are acquired between COM and NC.

The contactors are drawn in the deenergized state.

Additional and downtime relays are activated during normal operating conditions for F2300. Both relays are deactivated in the event of operating disruptions.

Example of addition connection

Basic electrical circuit diagram for connection of auxiliary relays for additional heat and downtime.

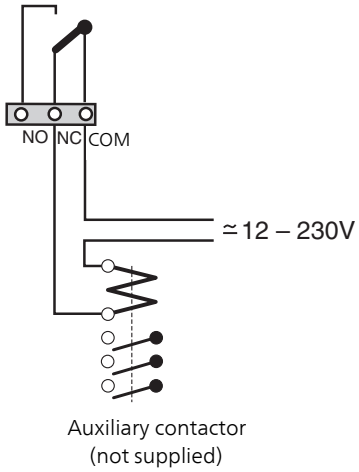

Communication

F2300 can communicate with NIBE indoor modules, by connecting the indoor module with a screened three core cable to terminal block AA21:J2 according to the following diagram:

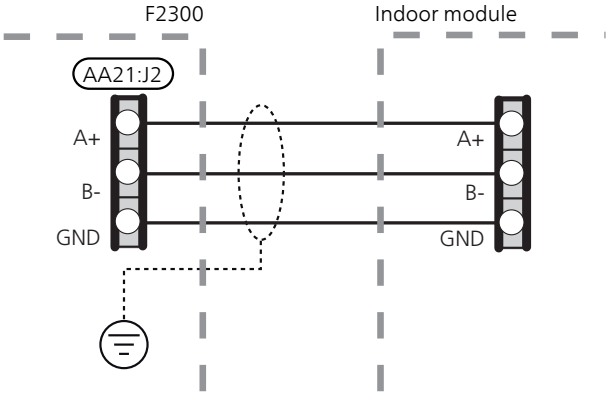

For connection of indoor module, see relevant manual on www.nibe.eu.

External indication of main alarm

F2300 is equipped with a contact for external indication of common alarms. The function becomes active with all types of existing alarms. Max load on the relay contact is250V 2A.

The connection for external indication of common alarms is made to terminal block X4:1 to 3 as illustrated below:

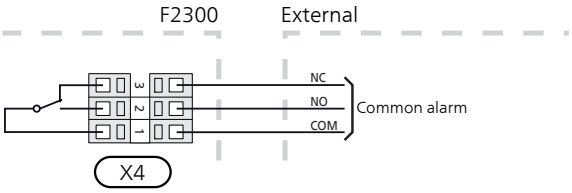

Connecting accessories

Instructions for connecting accessories are in the installation instructions provided for the respective accessory. See page 37 for the list of the accessories that can be used with F2300.

6 Commissioning and adjusting

Preparations

- Ensure that the heat pump cannot be damaged during transport.
- Before commissioning, check that the heating circuit is filled and well vented.
- Check the pipe system for leaks.

Filling and venting the heating medium system

1. The heating medium system is filled with water to the required pressure.
2. Vent the system using the venting nipple on the enclosed flexible pipe and possibly the circulation pump.

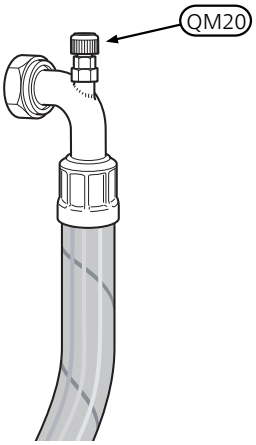

Balance temperature

The balance temperature is the outdoor temperature when the heat pump's stated output is equal to the building's output requirement. This means that the heat pump covers the whole building's output requirement down to this temperature.

Set the balance temperature, additional heat, in channel A5.

Stop temperature

When the stop temperature (channel A7) is set between -10 and -25 C the flow temperature is limited linearly from -10 C / 65 °C to -25 °C / 63 °C (see diagram on page 42).

If the ambient temperature is below the set value for stop temperature heating must occur using the additional heat.

Soft-starter

F2300 is equipped with a soft-start (AA10) that limits the inrush current for the compressor.

Compressor heater

F2300 is equipped with a compressor heater that heats the compressor before start-up and when the compressor is cold.

> **NOTE**
> The compressor heater must have been connected for 6 – 8 hours before the first start, see the section "Start-up and inspection".

Collar heater

F2300 is equipped with a collar heater that can heat the fan collar if necessary (not activated upon delivery).

> **NOTE**
> The collar heater is only required in certain cases where the ambient temperature is too low for a long period.

Phase sequence control

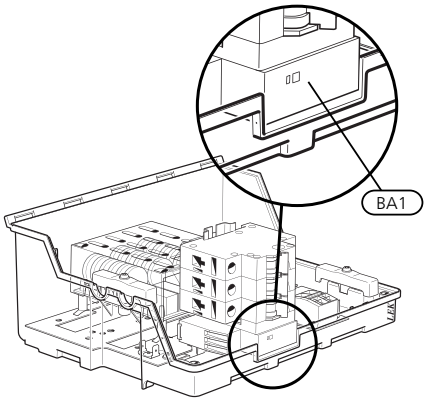

The phase sequence sensor (BA1) starts as soon as the power supply is connected to the heat pump. Check the phase sequence as shown below.

- Red LED is lit at correct phase sequence
- If there is a fault in the phase sequence, the heat pump receives an alarm 07 in channel S1 and the LED flashes.

> **NOTE**
> Check the phase sequence when starting!

Start-up and inspection

1. Communication cable, terminal block (AA21:J1 or AA21:J2) or thermostat, terminal block (X5) must not be connected.
2. Turn the isolator switch on.
3. Ensure that the F2300 is connected to the power source.
4. Check that the motor circuit-breaker (FC2) is on.
5. Check that the LED on phase sequence sensor (BA1) lights red.
6. The compressor heater (EB10) must have been operational for at least 6 – 8 hours before the compressor start can be initiated. This is done by switching on the control voltage and disconnecting the communications cable or thermostat.
7. The display on the control card (AA21) shows C0/CC F0 H1/H3 depending on the ambient temperature. During this period the compressor is heated to increase the service life.
8. The communication cable or external thermostats are connected after 6 – 8 hours. See the section ""Thermostat control" under the electrical connection chapter.
9. Restart any NIBE indoor module. See information in relevant manual on www.nibe.eu
10. Once the connection is made, the compressor starts after approx. 180 minutes if needed.
11. Adjust the charge flow according to the diagram, see the section "Adjustment, charge flow"
12. Adjust the menu settings if necessary.
13. Fill in the commissioning report in the user manual.
14. Reinstall the removed panels and cover.
15. Remove the protective film from the cover on F2300.

> **NOTE**
> The external control must be taken into consideration when connecting.

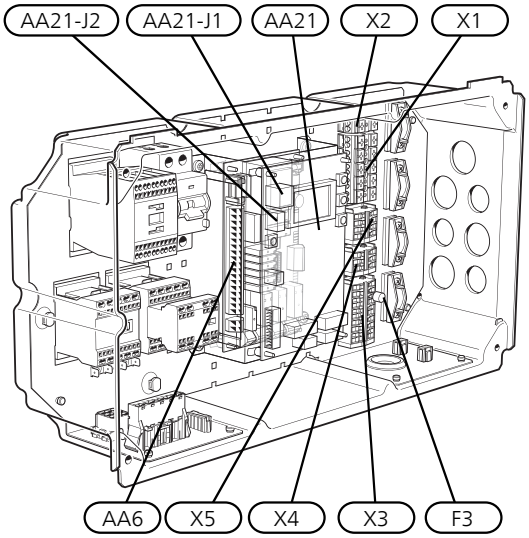

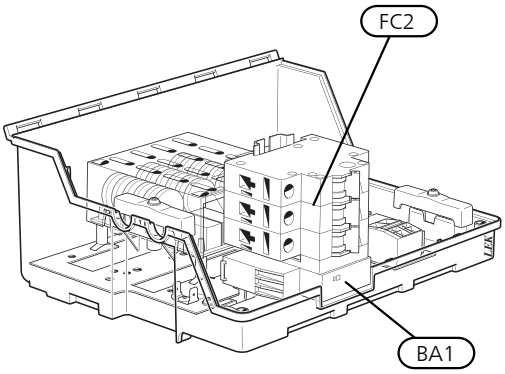

Readjusting, heating medium side

Air is initially released from the hot water and venting may be necessary. If bubbling sounds can be heard from the heat pump, the circulation pump and radiators the entire system will require further venting. When the system is stable (correct pressure and all air eliminated) the automatic heating control system can be set as required.

Adjustment, charge flow

For the heat pump to function correctly all year, the charge flow must be adjusted using the NIBE indoor module or according to the procedure below, with other controls.

Adjusting the temperature difference (ΔT) between the flow temperature and the return temperature is best done during hot water charging or at high load.

This is most easily done using the temperatures measured in channel T2 (supply temperature) minus channel T3 (return temperature). This temperature difference (ΔT) is adjusted using the circulation pump and control valve. Adjustment is performed with stable operation about 5 minutes after start, or about 5 minutes after defrosting at cold ambient temperatures.

The temperature difference shall be as in the diagram below (+1- 2 K). At outdoor temperatures above 28 °C the charge flow can be increased by 30 % to obtain a lower ΔT.

The diagrams show the heat pump with a high fan speed, at low fan speeds ΔT will be 0.5 to 1 degrees lower.

Quoted outputs refer to compressor, fan and control at nominal heating medium flow. During operation that requires defrosting the relationship between input and output is reduced by about 10%.

Charge flow F2300

Adjustment of charge flow

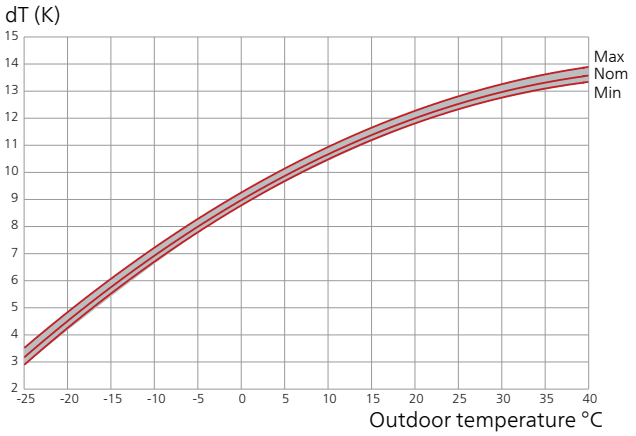

F2300-14

Phase current, A
Specified output, kW

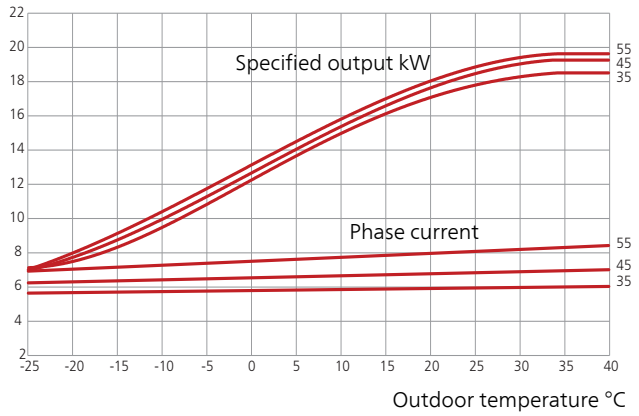

F2300-20

Phase current, A
Specified output, kW

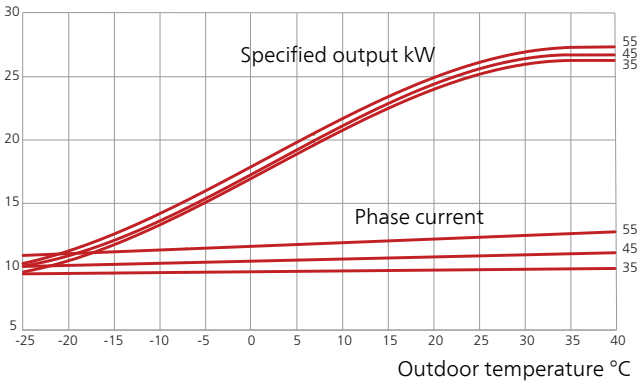

7 Control - Introduction

General

F2300 is equipped with an internal electronic control that handles those functions that are necessary for operation of the heat pump, for example defrosting, stop at max/min temperature, connection of the compressor heater as well as enabling the heater for the condensation watering trough and monitoring of pressure switches.

The temperatures, number of starts and the operating time can also be read.

The integrated controller is set during installation and can be used during a service.

Under normal operating conditions the home owner does not need to have access to the controller.

F2300 has an integrated return line sensor that limits the return temperature.

F2300 can also be switched on/off via signals from other control equipment or a thermostat. If F2300 is controlled from a NIBE indoor module (accessory) the control is described in the instructions supplied.

The indoor module communicates with F2300 which means that settings and measurement values from F2300 can be adjusted and read off in the indoor module.

Navigation

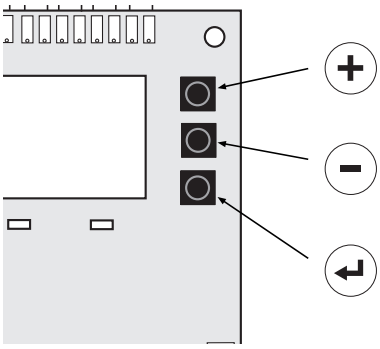

Plus button

The plus button (S1) is used to browse through the channel system (forwards) or raise the value of the selected parameter.

See the section "Control" – "Channel description"

Minus button

The minus button (S2) is used to browse through the channel system (backwards) or lower the value of the selected parameter.

See the section "Control" – "Channel description"

Enter button

The Enter button (S3) is used to activate and confirm value changes.

See the section "Control" – "Channel description"

To modify a value, first press the Enter button to activate modification mode, the value flashes. Adjust the value as required using the Plus button or Minus button. Holding the Plus button or Minus button in for about 3 seconds speeds up the change in value. Then confirm using the Enter button. The value will stop flashing.

The instructions are divided into three parts: status, temperatures and adjustable values.

Quick movement between the different types is carried out by pressing the enter button when STATUS, TEMP. or ADJUST. are displayed.

Display explanation

C0	F0	H0
S1		01

Compressor: C

Shows the present compressor status.

C0 Compressor off, circulation pump off

C Flashes when the compressor wants to start but is prevented by the time conditions or high return temperature.

C1 Compressor on, circulation pump on

CC Compressor off, circulation pump on

CD Defrosting in progress

Fan: F

The fan has two speeds, high or low. The fan is controlled by the ambient temperature. The lower speed is used when the ambient temperature is too high to limit the output. At an ambient temperature lower than the temperature in the table below the fan speed is changed to high.

Type	Ambient temperature (°C)
14 kW	20
20 kW	20

F0 Fan off

F1 Fan on, low speed

F2 Fan on, high speed

Heater: H

The compressor heater is always active when the compressor is switched off.

The condensation water trough heater is connected during defrosting when the ambient temperature falls below or is equal to 2.5 °C.

If the collar heater is permitted (channel A14), it activates every third defrosting, when the ambient temperature lies below 2 °C.

H0 Compressor heater off
Condensation water trough heater off
Collar heater off

H1 Compressor heater on

H2 Condensation water trough heater on

H3 Compressor heater on
Condensation water trough heater on

H4 Collar heater on

H5 Compressor heater on
Collar heater on

H6 Condensation water trough heater on
Collar heater on

H7 Compressor heater on
Condensation water trough heater on
Collar heater on

Channel: S1

Shows the current channel. Change channels using the Plus button or the Minus button.

Value: 01

Shows the current value. Increase/decrease value using the plus button respective minus button.

Control conditions

Control conditions, cold outdoor air

- When the ambient air temperature (channel T1) drops below the set temperature in channel A7 the heat pump stops and indicates 03 in channel S1. Both the additional relay and the downtime relay are then activated at the same time.
- If the ambient temperature sensor registers a temperature that is at least 2.1 °C higher than the set temperature in channel A7, a time counter starts.
- When the time counter has reached 45 minutes, both the additional relay and downtime relay deactivate to obtain a more comfortable temperature for the compressor to start at.
- When a further 15 minutes have passed, the compressor is permitted to start and the additional relay activates a few seconds later. However, the downtime relay is deactivated.
- If the ambient temperature at any point during the total 60 minutes falls below channel A7 + 2.1 °C the counter is reset. It does not start counting again unless the temperature is sufficiently high once again.

B = Set temperature for cold outdoor air (channel A7).

A = Set temperature for cold outdoor air + 2.1 °C.

1. The ambient temperature (channel T1) drops below the set temperature in channel A7 (B). The heat pump stops and both the relays are activated.
2. The ambient temperature is 2.1 °C) above the set temperature in channel A7 (A). A time counter starts from 0.
3. The ambient temperature falls below A. The timer is reset and stopped.
4. The ambient temperature returns to above A. The time counter starts again (from 0).
5. The time counter has counted to 45 minutes. Both relays are deactivated.
6. The time counter has counted to 60 minutes. The compressor is permitted to start again.

NOTE

It is heat pump's ambient temperature sensor that applies.

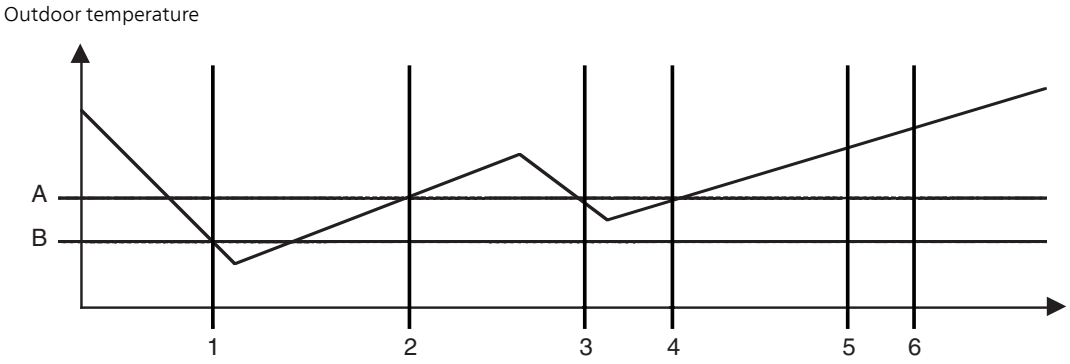

Control conditions defrosting A16:1 (factory setting)

- Defrosting occurs actively (with compressor on and fan off) or passively (with compressor off and fan on).
- A time counter counts up every minute if the compressor is running and the temperature of the evaporator sensor (channel T7) falls below the setting in channel A9
- Channel S9 shows time to defrost in minutes. When this value is 0 minutes defrosting starts.
- If the collar heater is activated in channel A14, the ambient temperature is less than or equivalent to 2 °C and the compressor is running the collar heater starts at every third defrosting. The collar heater prevents the build up of ice on the fan collar.
- If "deicing fan" is activated in channel A15, depending on the evaporation temperature and if the collar heater is not running, deicing fan starts during defrost. The deicing fan prevents the build up of ice on the fan blades and the front fan grille.
- If the evaporator is too cold a "safety defrost" starts. This defrost can be started earlier than when the normal defrost would start. If 10 safety defrosts in a row occur alarm 19 (channel S1) is activated which is a permanent alarm.
- If defrosting is necessary, passive defrosting starts when T1 ≥ 4 °C and the compressor has stopped because the heating requirement has been met.

Active defrosting at T1 < 4 °C:

1. The four way valve shifts to defrosting.
2. The fan stops and the compressor continues to run.
3. When defrosting is complete the four way valve shifts back to heating mode and after 30 seconds the fan starts.
4. The ambient temperature sensor is locked and the high return temperature alarm is blocked for two minutes after defrosting.

Passive defrosting T1 ≥ 4 °C:

1. The compressor stops.
2. The four way valve does not shift.
3. Fan runs at high speed.
4. When passive defrosting is complete, the compressor starts.
5. The ambient temperature sensor is locked and the high return temperature alarm is blocked for two minutes after defrosting.

Passive defrosting ends when time in S9 = A8.

There are five possible reasons for an active defrosting to end:

1. The temperature of the evaporator sensor has reached the set temperature in channel A10 (normal stop).
2. When defrosting has gone on for longer than 15 minutes. This may be due to too little energy in the heat source, too strong wind effect on the evaporator and/or that the sensor on the evaporator is not correct and therefore displays too low temperature (at cold outdoor air).
3. When the temperature on the return line sensor channel T3 falls below 10 °C.
4. The high-pressure switch deploys during defrosting. This is indicated as alarm 10 in channel S1 and the compressor is stopped. After two minutes the compressor starts again (if the pressure has fallen), otherwise there is a constant high pressure alarm (alarm 06).
5. The temperature on the supply line sensor channel T2 falls below 4 .

Control conditions defrosting A16:0

- A time counter counts up every minute if the compressor is running and the temperature of the evaporator sensor (channel T7) falls below the setting in channel A9
- Defrosting starts if the timer S9 has counted down or the temperature conditions for defrosting are met.
- If the collar heater is activated in channel A14, the ambient temperature is less than or equivalent to 2 °C and the compressor is running the collar heater starts at every third defrosting. The collar heater prevents the build up of ice on the fan collar.
- If "deicing fan" is activated in channel A15, depending on the evaporation temperature and if the collar heater is not running, deicing fan starts during defrost. The deicing fan prevents the build up of ice on the fan blades and the front fan grille.
- If the evaporator is too cold a "safety defrost" starts. This defrost can be started earlier than when the normal defrost would start. If 10 safety defrosts in a row occur alarm 19 (channel S1) is activated which is a permanent alarm.

Defrosting occurs as follows:

1. The four way valve shifts to defrosting
2. The fan stops and the compressor continues to run.
3. When defrosting is complete the four way valve shifts back to heating mode and after 30 seconds the fan starts.
4. The ambient temperature sensor is locked and the high return temperature alarm is blocked for two minutes after defrosting.

There are five possible reasons for defrosting to finish:

1. The temperature of the evaporator sensor has reached the set temperature in channel A10 (normal stop).
2. When defrosting has gone on for longer than 15 minutes. This may be due to too little energy in the heat source, too strong wind effect on the evaporator and/or that the sensor on the evaporator is not correct and therefore displays too low temperature (at cold outdoor air).
3. The temperature on the return sensor falls below 10 °C.
4. The high-pressure switch deploys during defrosting. This is indicated as alarm 10 in channel S1 and the compressor is stopped. After two minutes the compressor starts again (if the pressure has fallen), otherwise there is a constant high pressure alarm (alarm 06).

5. The temperature on the flow temperature sensor falls below 4 °C.

8 Control - Channels

Status channels

Status

These channels show the status and statistics.

Channel

S1 Shows the operating status of F2300.

Value

- **01** Normal operation.
- **02** Defrosting is run.
- **03** Cold outdoor air temperature.
- **04** High return temperature.
- **07** Motor circuit breaker (FC2), phase monitor (BA1), high pressure switch (BP10), low pressure switch ((BP2)) and/or the fan's internal motor protection has tripped (MS alarm).
- **08** Sensor alarm. One of the temperature sensors is defective.
- **09** Communication error (only when NIBE SMO and NIBE indoor module is connected).
- **10** High pressure switch (BP1) has tripped during defrosting (resets automatically)
- **12** Flow and return line sensors fitted incorrectly.
- **13** Hot outdoor air. Appears when the ambient temperature exceeds 40 °C.
- **14** High flow temperature.
- **15** Defrosting interrupted. Appears if defrosting is unsuccessful 3 times in a row.
- **16** Short operations times. Appears if operation time has been shorter than 2 minutes 3 times in a row.
- **17** Hot gas alarm. Appears when the hot gas exceeds 135 °C. The alarm resets automatically when the temperature falls below 60 °C. If the alarm is activated 3 times within 240 minutes it becomes continuous.
- **19** Low evaporation temperature. Appears if 10 safety defrosts in a row have occurred.

S2 ***Value***

Shows the compressor status.

- **00** Compressor off.
- **01** Compressor on.
- **XX** Compressor blocked due to an alarm
- **nn** Compressor start in nn minutes.

S3 Shows the number of compressor starts, accumulatively.

S4 Shows the compressor's operating time in hours, accumulatively.

S5 Shows the operating hours for connected additional heat, accumulatively.

S6 Shows whether any additions are activated

Active input indicated by 1.

Deactivated input indicated by 0.

S7 Alarm input status (BP1 (LP not used) and BA1), 1 indicates the input is OK.

S7 1 / 1 / 1

S9 Displays time until next defrost.

S10 Software version number.

Temperature channels

Temp.

These channels show the current temperatures.

Channel

T1 Measured temperature on the ambient temperature sensor (BT28).

T2 Measured temperature on the flow temperature sensor (BT12).

T3 Measured temperature on the return line sensor (BT3).

T4 Measured temperature on the suction gas sensor (BT17).

T5 Measured temperature on the hot gas sensor (BT14).

T6 Measured temperature on the liquid line sensor (BT15).

T7 Measured temperature on the evaporator sensor (BT16).

Setting channels

Adjust.

All setting are made on these channels.

Channel

A1 Address for communication with NIBE indoor module.

When connecting to NIBE indoor module this channel should be on 1.

When connecting to NIBE indoor module (that has support for several heat pumps) this (master) must be selected so that each F2300 (slave) in the system receives a unique address (1 – 9) for communication with the indoor module.

For example 3 x F2300 in the same system are allocated the addresses 1, 2 and 3. The F2300 that produces hot water should be set to 1.

A3 Connection difference return temperature. After the compressor is stopped for a high return temperature, the return temperature must drop by the set value in order to permit the compressor to start. The value is adjustable between 0 and 10 °C. Factory setting is 4 °C.

With NIBE indoor module connected this menu cannot be changed, it is locked at 2 °C.

A4 Minimum time period in minutes between compressor starts. The value is adjustable between 20 and 60 minutes. Factory setting 20 minutes.

A5 Balance temperature, the set outdoor air temperature when the additional heat relay can be activated from channel A6 without affecting compressor operations. Additional heat relay is activated first after the set time on channel A6. The value is adjustable between -15 °C and +10 °C. Factory setting is 0 °C.

A6 Continuous operating time with the compressor before additional heat is permitted. The value is adjustable between 1 and 120 minutes. Factory setting 120 minutes.

A7 Stop temperature, the set outdoor air temperature value when the downtime relay is activated, F2300 stops. When the stop temperature is set between 0 °C and -25 °C the supply temperature is limited linearly from -10 °C / 65 °C to -25 °C / 63 °C (see diagram on page. 42). Factory setting is -20 °C.

A8 Minimum running time, heat production before new defrosting is permitted. The value is adjustable between 10 and 90 minutes. Factory setting according to the table below.

Type	Minutes
14 kW	60
20 kW	55

A9 Start temperature for permitted defrosting (evaporator sensor). The value is adjustable between -5 °C and 0 °C. Factory setting -3 °C.

A10 Stop temperature for defrosting (evaporator sensor). The value is adjustable between 10 °C and 40 °C. Factory setting 20 °C.

A12 Manual activation of active defrosting procedure. Change the value 0 till 1 and confirm using the Enter button.

A13 Restore factory default settings. Change the value 0 to 1 and confirm using the Enter button.

A14 Activating the collar heater function. Change the value 0 till 1 and confirm using the Enter button.

A15 Activating the "deicing fan" function. Change the value 0 till 1 and confirm using the Enter button.

A16 Selecting defrosting type. 1 stands for standard defrosting, active or passive. 0 stands for only active, time controlled defrosting. Factory setting 1.

> **NOTE**
> In the event of a defrosting problem the value in channel A16 can change to 0 to eventually rectify the problem.

9 Disturbances in comfort

Troubleshooting

NOTE
Work behind covers secured by screws may only be carried out by, or under the supervision of, a qualified installation engineer.

NOTE
As F2300 can be connected to a large number of external units, these should also be checked.

NOTE
In the event of action to rectify malfunctions that require work within screwed hatches the incoming electricity must isolated at the safety switch.

NOTE
The alarm is acknowledged on the indoor module or by the voltage to the heat pump being interrupted and then restarted.

The following tips can be used to rectify comfort disruption:

Basic actions

Start by checking the following possible fault sources:
- That the heat pump is running or that the supply cable to F2300 is connected.
- Group and main fuses of the accommodation.
- The property's earth circuit breaker.
- The heat pump's motor circuit breaker (FC2).
- The heat pump's automatic protection (FB1).

Low hot water temperature or a lack of hot water

This part of the fault-tracing chapter only applies if the heat pump is docked to the hot water heater.
- Large hot water consumption.
  - Wait until the hot water has heated up.
- Incorrect settings in the indoor module.
  - See the manual for the indoor module.

Low room temperature

- Closed thermostats in several rooms.
  - Set the thermostats to max in as many rooms as possible.
- External switch for changing the room heating activated.
  - Check any external switches.
- Incorrect settings in indoor module.
  - See the manual for the indoor module.

High room temperature

- External switch for changing the room heating activated.
  - Check any external switches.
- Incorrect settings in indoor module.
  - See the manual for the indoor module.

F2300 not in operation

- External control equipment has not given the start signal.
  - Check the settings on the control equipment.
- Fuses have tripped.
  - Replace the fuse or reset the MCB.
- Cold outdoor air. Indicated as 03 in channel S1.
  - Wait until the ambient temperature is 2 °C higher than the heat pump's set stop value.
- Tripped high pressure pressostat. Indicated as 07 in channel S1.
  - Check that the system has been vented correctly. Check the fuses. Check that the particle filter is not blocked. Check the heating medium flow in the charge circuit.
- Ambient temperature is hotter than 40 °C. Indicated as 13 in channel S1.
  - Wait until the ambient temperature is colder than 38 °C.
- Low evaporation temperature. Indicated as 19 in channel S1.
  - Ensure that the air flow is not blocked.
- Time conditions do not permit start.
  - Wait until the set conditions have run out. (If C flashes in the display the start conditions have been given.)
- Motor circuit breaker (FC2), phase monitor (BA1), high pressure switch (BP10), low pressure switch (BP2) and/or the fan's internal motor protection has deployed (MS alarm). Indicated as 07 in channel S1.
  - Check the fuses.
  - Check the phase sequence on incoming electricity supply.
  - Check the heating medium flow in the charge circuit.
- Flow and return line sensors fitted incorrectly. Indicated as 12 in channel S1.
  - Check the pipe installation.
- The heat pump will not defrost.
  - Check the temperature on the return line sensor (channel T3). If it is below 10 °C the heat pump will not defrost.
  - Check the temperature on the evaporator sensor (channel T7). If it is higher than the set Start temperature, defrosting (channel A9) during compressor operation the heat pump will not defrost.
  - Check the charge flow and the particle filter which may be partially clogged.
  - Check the charge flow and the note the compressor's limitations at low ambient temperatures.
- Unsuccessful defrosting. Indicated as 15 in channel S1.
  - Check the charge flow.
- Short operations times Indicated as 16 in channel S1.

- Check the connection difference for the thermostat. Check the start temperature hot water in any indoor module. Check the charge supply and the particle filter which may be partially clogged.
- Hot gas temperature exceeds 135 °C. Indicated as 17 in channel S1.
  - Contact refrigeration technician.

Ice build up in the fan collar

> **NOTE**
> Only applies in certain areas.

- Collar heater (channel A14) not activated.
  - Activate the collar heater in channel A14.

Ice build up on the fan blades and front grille

> **NOTE**
> Only applies in certain areas.

- "Deicing fan" (channel A15) not activated.
  - Activate "deicing fan" in channel A15.

Sensor placement

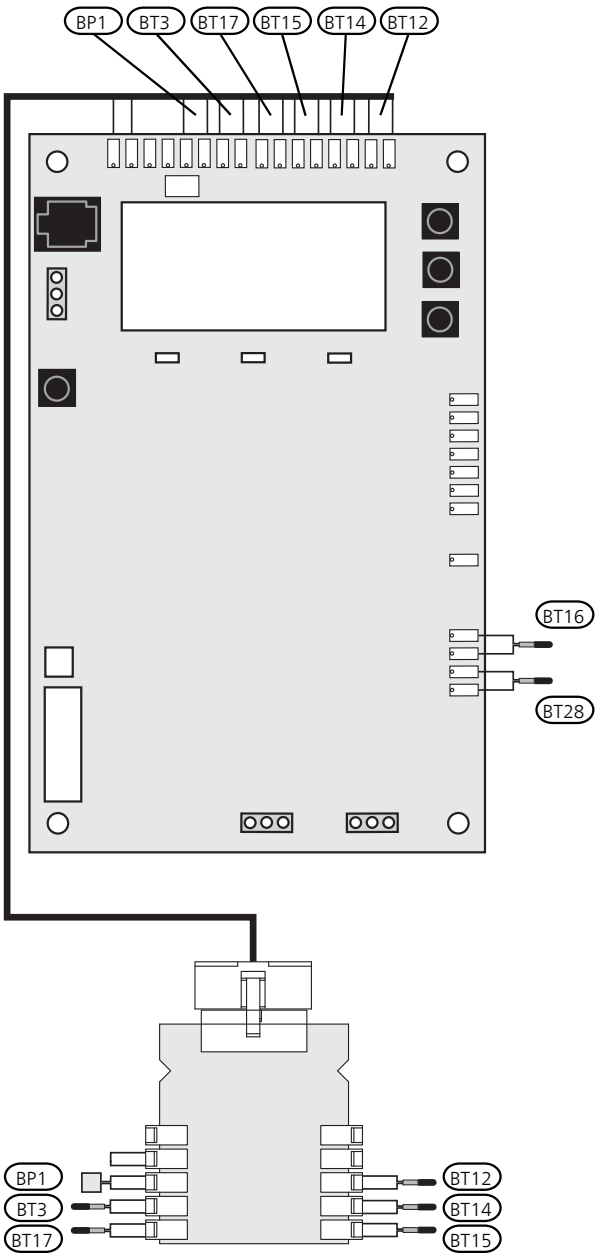

BP1	High pressure switch
BT3	Temperature sensor, heating medium return line
BT12	Temperature sensor, condenser supply line
BT14	Temperature sensor, hot gas
BT15	Temperature sensor, fluid pipe
BT16	Temperature sensor, evaporator
BT17	Temperature sensor, suction gas
BT28	Ambient temperature sensor

Data for temperature sensor return line (BT3), condenser supply (BT12) as well as fluid pipe (BT15)

Temperature (°C)	Resistance (kOhm)	Voltage (VDC)
-40	351.0	3.256
-35	251.6	3.240
-30	182.5	3.218
-25	133.8	3.189
-20	99.22	3.150
-15	74.32	3.105
-10	56.20	3.047
-5	42.89	2.976
0	33.02	2.889
5	25.61	2.789
10	20.02	2.673
15	15.77	2.541
20	12.51	2.399
25	10.00	2.245
30	8.045	2.083
35	6.514	1.916
40	5.306	1.752
45	4.348	1.587
50	3.583	1.426
55	2.968	1.278
60	2.467	1.136
65	2.068	1.007
70	1.739	0.891
75	1.469	0.785
80	1.246	0.691
85	1.061	0.607
90	0.908	0.533
95	0.779	0.469
100	0.672	0.414

Data for hot gas sensor (BT14)

Temperature (°C)	Resistance (kOhm)	Voltage (V)
40	118.7	4.81
45	96.13	4.77
50	78.30	4.72
55	64.11	4.66
60	52.76	4.59
65	43.64	4.51
70	36.26	4.43
75	30.27	4.33
80	25.38	4.22
85	21.37	4.10
90	18.07	3.97
95	15.33	3.83
100	13.06	3.68
105	11.17	3.52
110	9.59	3.36
115	8.26	3.19
120	7.13	3.01
125	6.18	2.84
130	5.37	2.67
135	4.69	2.50
140	4.10	2.33

Data for evaporator sensor (BT16), ambient sensor (BT28) and suction gas sensor (BT17)

Temperature (°C)	Resistance (kOhm)	Voltage (VDC)
-50	77.58	4.71
-45	57.69	4.62
-40	43.34	4.51
-35	32.87	4.37
-30	25.17	4.21
-25	19.43	4.03
-20	15.13	3.82
-15	11.88	3.58
-10	9.392	3.33
-5	7.481	3.07
0	6.000	2.80
5	4.844	2.54
10	3.935	2.28
15	3.217	2.03
20	2.644	1.80
25	2.186	1.59
30	1.817	1.39
35	1.518	1.22
40	1.274	1.07
45	1.075	0.93
50	0.911	0.81
55	0.775	0.71
60	0.662	0.62
65	0.568	0.54
70	0.490	0.47
75	0.4233	0.41
80	0.367	0.36
85	0.320	0.32
90	0.280	0.28
95	0.245	0.25
100	0.216	0.22

10 Accessories

Condensation water pipe

Condensation water pipe, different lengths.
KVR 10-10, 1 meter
Part no. 067 171
KVR 10-30, 2.5 meter
Part no. 067 172
KVR 10-60, 5 meter
Part no. 067 173

Heating thermostat

VT 10

Heating thermostat
Part no. 418 801

Indoor module

VVM 500

Part no. 069 400

SMO 20

Control module
Part no. 067 224

SMO 40

Control module
Part no. 067 225

11 Technical data

Dimensions and setting-out coordinates

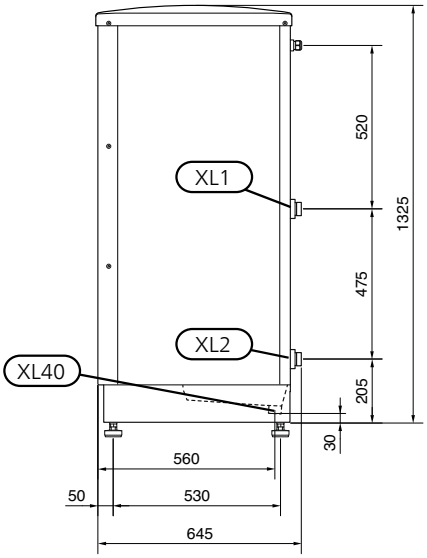

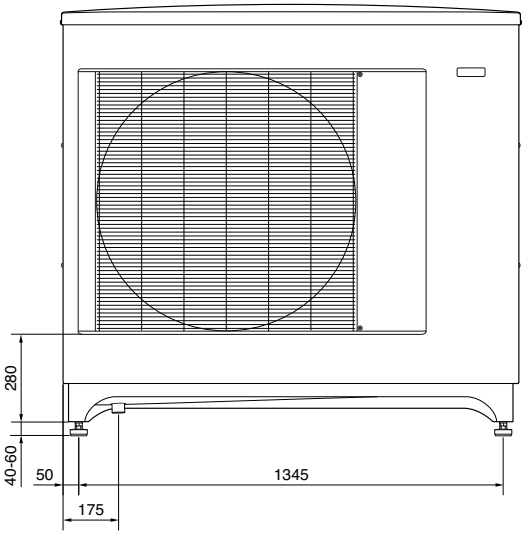

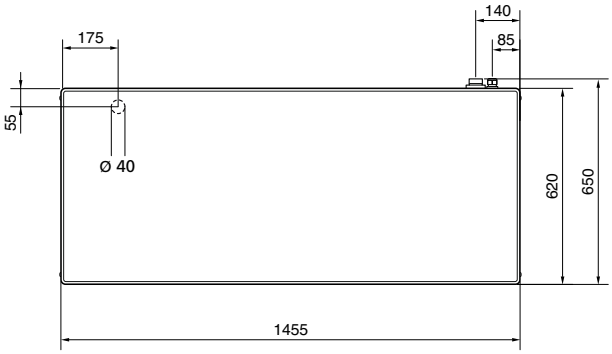

Pipe connections		
XL1	Connection, heating medium out of F2300	G1 1/4" (Ø35 mm)
XL2	Connection, heating medium in to F2300,	G1 1/4" (Ø35 mm)
XL40	Connection, drip tray drain	Ø40 mm

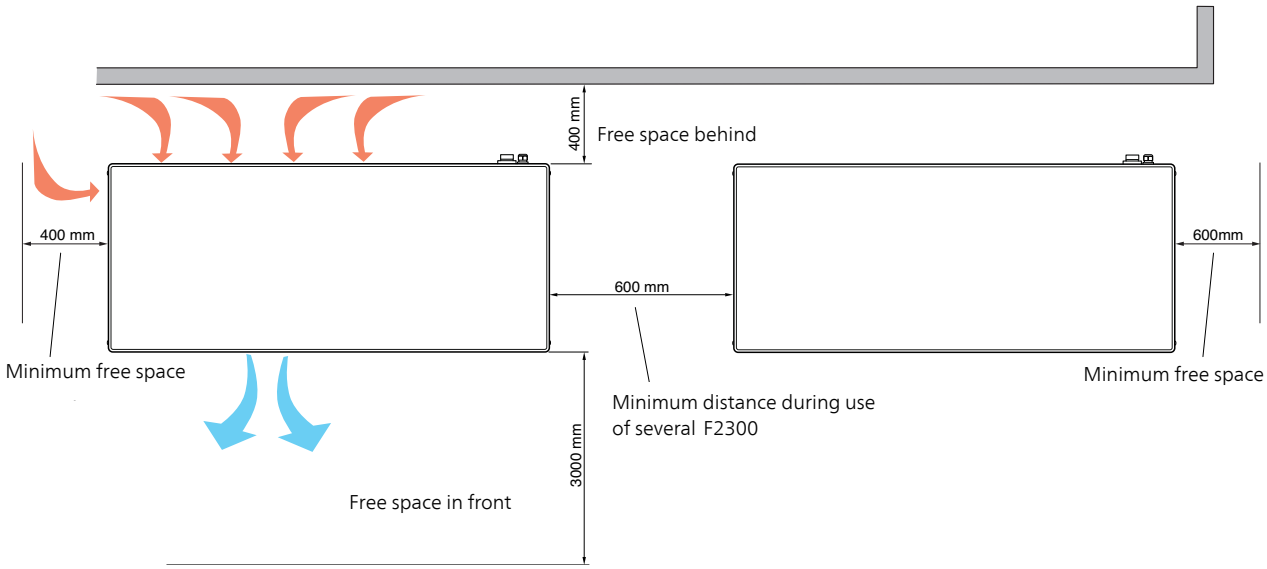

Sound pressure levels

F2300 is usually placed next to a house wall, which gives a directed sound distribution that should be considered. Accordingly, you should always attempt when positioning to choose the side that faces the least sound sensitive neighbouring area.

The sound pressure levels are further affected by walls, bricks, differences in ground level, etc and should therefore only be seen as guide values.

F2300 works with low fan speed or high fan speed depending on the ambient temperature.

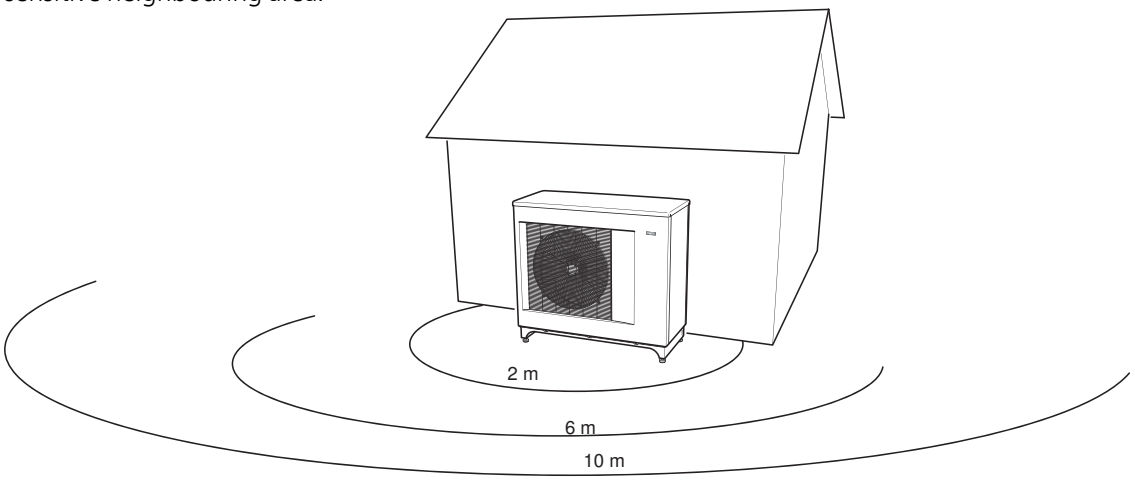

		14	20
Sound power level according to EN12102 at 7/45. Low fan speed/High fan speed	L_W(A)	50/62	53/62
Sound pressure level at 2 m. Fan low/high*	dB(A)	36/48	39/48
Sound pressure level at 6 m. Fan low/high*	dB(A)	26.5/38.5	29.5/38.5
Sound pressure level at 10 m. Fan low/high*	dB(A)	22/34	25/34

*Free space.

Technical specifications

3x400V		14	20
Output data at nominal flows [1)]			
15/55 Delivered / Supplied power / COP	kW/kW/-	17.0/4.49/3.79	23.6/6.43/3.68
7/35 Delivered / Supplied power / COP	kW/kW/-	14.1/2.96/4.77	17.8/4.32/4.12
2/45 Delivered / Supplied power / COP	kW/kW/-	13.1/3.58/3.65	17.9/5.11/3.49
-7/45 Delivered / Supplied power / COP	kW/kW/-	10.7/3.50/3.06	14.6/4.92/2.96
-7/55 Delivered / Supplied power / COP	kW/kW/-	11.0/4.24/2.59	15.2/5.95/2.55
-15/55 Delivered / Supplied power / COP	kW/kW/-	9.16/4.11/2.23	12.7/5.69/2.23
Output data according to EN 14511 [2)]			
10/35 Delivered / Supplied power / $COP_{EN14511}$	kW/kW/-	15.49/3.20/4.84	20.85/4.47/4.66
7/35 Delivered / Supplied power / $COP_{EN14511}$	kW/kW/-	13.8/3.14/4.39	17.7/4.37/4.04
7/45 Delivered / Supplied power / $COP_{EN14511}$	kW/kW/-	14.1/3.83/3.69	18.3/5.38/3.41
7/55 Delivered / Supplied power / $COP_{EN14511}$	kW/kW/-	15.22/4.78/3.18	19.04/6.55/2.91
2/35 Delivered / Supplied power / $COP_{EN14511}$	kW/kW/-	11.84/3.08/3.84	15.46/4.38/3.53
2/45 Delivered / Supplied power / $COP_{EN14511}$	kW/kW/-	12.27/3.74/3.28	15.95/5.28/3.02
-7/35 Delivered / Supplied power / $COP_{EN14511}$	kW/kW/-	9.41/3.03/3.10	12.83/4.32/2.97
-7/45 Delivered / Supplied power / $COP_{EN14511}$	kW/kW/-	9.72/3.66/2.65	13.28/5.15/2.58
-15/35 Delivered / Supplied power / $COP_{EN14511}$	kW/kW/-	7.49/2.96/2.53	10.37/4.2/2.47
-15/45 Delivered / Supplied power / $COP_{EN14511}$	kW/kW/-	7.74/3.52/2.20	10.73/4.97/2.16
Electrical data			
Rated voltage		400V 3NAC 50 Hz	
Max operating current, heat pump	A_{rms}	12	16
Max operating current, compressor	A_{rms}	8.2	12.8
Starting current	A_{rms}	30	39.6
Nominal output fan (low/high)	W	100/224	100/224
Fuse	A_{rms}	16	16
Refrigerant circuit			
Type of refrigerant		R407C	
Type of compressor		Scroll	
Volume	kg	2.2	2.8
Cut-out value pressure switch HP (BP10)	MPa	3.2 (32 bar)	
Cut-out value pressure switch HP (BP1)	MPa	2.9 (29 bar)	
Difference pressostat HP	MPa	-0.7 (-7 bar)	
Cut-out value pressostat LP	MPa	0.02 (0.2 bar)	
Difference pressostat LP	MPa	0.05 (0.5 bar)	
Brine			
Air flow (low/high)	m^3/h	3700/6000	3700/6000
Min/Max air temp	°C	-25/40	
Defrosting system		Reversing	
Heating medium			
Min/Max system pressure heating medium	MPa	0.05/0.3 (0.5/3 bar)	
Nominal flow [3)] (Min flow during defrosting)	l/s	0.33	0.47
Min/Max flow	l/s	0.33/0.67	0.47/0.94
Internal pressure drop at nominal flow	kPa	4.5	4.5

3x400V		14	20
Max/Min heating medium temp continuous operation	°C	65/25	
Connection heating medium ext thread	mm	G1 1/4" (Ø35mm)	
Dimensions and weight			
Width	mm	1455	
Depth	mm	620	
Height with stand	mm	1385	
Weight (excl. packaging)	kg	225	230
Miscellaneous			
Enclosure class		IP 24	
Colour		Dark gray	
Part No.		067 063	067 064

SCOP & Pdesign F2300 according to EN 14825				
	14 kW		20 kW	
	Pdesign	SCOP	Pdesign	SCOP
SCOP 35 Average climate (Europe)	13	3.9	19	3.6
SCOP 55 Average climate (Europe)	13.5	3.2	19	3
SCOP 35 Cold climate	10	3.5	17	3.3
SCOP 55 Cold climate	11.5	2.9	17	2.8
SCOP 35 Warm climate	14	4.6	21	4.4
SCOP 55 Warm climate	16.5	3.8	22	3.6

1)Quoted outputs refer to compressor, fan and control at nominal heating medium flow. During operation that requires defrosting the relationship between input and output is reduced by about 10%.

2)Rated outputs including defrosting according to EN14511 at heating medium flow corresponding to DT=5 K at 7/45.

3)Nominal flow corresponds to DT=10 K at 7/45.

Working area

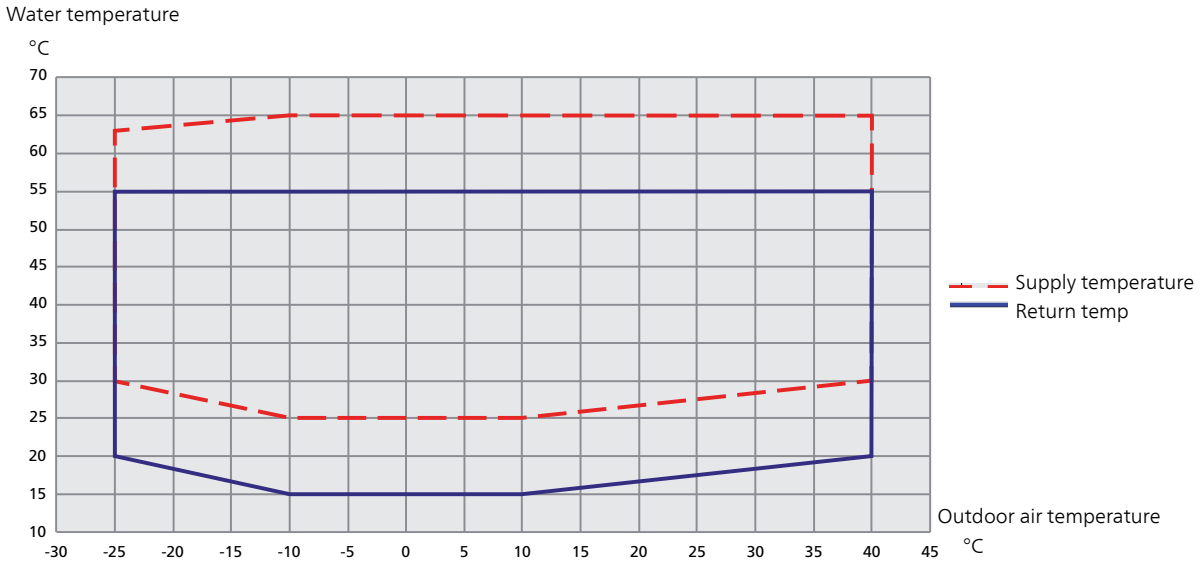

During shorter time it is allowed to have lower working temperatures on the water side, e.g. during start up.

Energy labelling

Information sheet

Supplier		NIBE	
Model		**F2300-14**	**F2300-20**
Model hot water heater		**VVM 500**	**VVM 500**
Temperature application	**°C**	**35 / 55**	**35 / 55**
Declared load profile for water heating		**XXL**	**XXL**
Seasonal space heating energy efficiency class, average climate		**A++ / A++**	**A+ / A+**
Water heating energy efficiency class, average climate		**A**	**A**
Rated heat output (Pdesignh), average climate	kW	12.9 / 12.9	17.5 / 17.3
Annual energy consumption space heating, average climate	kWh	6,803 / 8,143	9,651 / 11,453
Annual energy consumption water heating, average climate	kWh	2,203	2,266
Seasonal space heating energy efficiency, average climate	%	154 / 128	147 / 122
Water heating energy efficiency, average climate	%	98	95
Sound power level L_{WA} indoors	dB	35	35
Rated heat output (Pdesignh), cold climate	kW	12.9 / 12.6	17.0 / 16.7
Rated heat output (Pdesignh), warm climate	kW	16.7 / 16.7	19.8 / 19.8
Annual energy consumption space heating, cold climate	kWh	9,158 / 10,557	12,500 / 14,433
Annual energy consumption water heating, cold climate	kWh	2,553	2,632
Annual energy consumption space heating, warm climate	kWh	4,902 / 5,892	5,956 / 7,365
Annual energy consumption water heating, warm climate	kWh	2,042	2,095
Seasonal space heating energy efficiency, cold climate	%	136 / 115	131 / 111
Water heating energy efficiency, cold climate	%	84	82
Seasonal space heating energy efficiency, warm climate	%	179 / 148	175 / 141
Water heating energy efficiency, warm climate	%	105	103
Sound power level L_{WA} outdoors	dB	62	62

Data for energy efficiency of the package

Model		**F2300-14**	**F2300-20**
Model hot water heater		**VVM 500**	**VVM 500**
Temperature application	**°C**	**35 / 55**	**35 / 55**
Controller, class		VII	
Controller, contribution to efficiency	%	3.5	
Seasonal space heating energy efficiency of the package, average climate	%	157 / 131	150 / 125
Seasonal space heating energy efficiency class of the package, average climate		**A++ / A++**	**A++ / A++**
Seasonal space heating energy efficiency of the package, cold climate	%	139 / 118	135 / 115
Seasonal space heating energy efficiency of the package, warm climate	%	183 / 152	178 / 144

The reported efficiency of the package also takes the controller into account. If an external supplementary boiler or solar heating is added to the package, the overall efficiency of the package should be recalculated.

Technical documentation

Model		F2300-14					
Model hot water heater		**VVM 500**					
Type of heat pump		☒ Air-water ☐ Exhaust-water ☐ Brine-water ☐ Water-water					
Low-temperature heat pump		☐ Yes ☒ No					
Integrated immersion heater for additional heat		☐ Yes ☒ No					
Heat pump combination heater		☒ Yes ☐ No					
Climate		☒ Average ☐ Cold ☐ Warm					
Temperature application		☒ Average (55 °C) ☐ Low (35 °C)					
Applied standards		EN14825 / EN16147					
Rated heat output	Prated	12.9	kW	**Seasonal space heating energy efficiency**	η_s	128	%
Declared capacity for space heating at part load and at outdoor temperature Tj				*Declared coefficient of performance for space heating at part load and at outdoor temperature Tj*			
Tj = -7 °C	Pdh	9.9	kW	Tj = -7 °C	COPd	2.5	kW
Tj = +2 °C	Pdh	12.2	kW	Tj = +2 °C	COPd	3.3	kW
Tj = +7 °C	Pdh	13.9	kW	Tj = +7 °C	COPd	3.9	kW
Tj = +12 °C	Pdh	15.8	kW	Tj = +12 °C	COPd	4.5	kW
Tj = biv	Pdh	10.4	kW	Tj = biv	COPd	2.6	kW
Tj = TOL	Pdh	9.2	kW	Tj = TOL	COPd	2.2	kW
Tj = -15 °C (if TOL < -20 °C)	Pdh		kW	Tj = -15 °C (if TOL < -20 °C)	COPd		kW
Bivalent temperature	T_{biv}	-5.0	°C	Min. outdoor air temperature	TOL	-10	°C
Cycling interval capacity	Pcych		kW	Cycling interval efficiency	COPcyc		-
Degradation coefficient	Cdh	0.99	-	Max supply temperature	WTOL	65.0	°C
Power consumption in modes other than active mode				*Additional heat*			
Off mode	P_{OFF}	0.002	kW	Rated heat output	Psup	3.7	kW
Thermostat-off mode	P_{TO}	0.015	kW				
Standby mode	P_{SB}	0.015	kW	Type of energy input	Electric		
Crankcase heater mode	P_{CK}	0.035	kW				
Other items							
Capacity control	Fixed			Rated airflow (air-water)		6,000	m^3/h
Sound power level, indoors/outdoors	L_{WA}	35 / 62	dB	Nominal heating medium flow		1.62	m^3/h
Annual energy consumption	Q_{HE}	8,143	kWh	Brine flow brine-water or water-water heat pumps			m^3/h
For heat pump combination heater							
Declared load profile for water heating	XXL			**Water heating energy efficiency**	η_{wh}	98	%
Daily energy consumption	Q_{elec}	10.03	kWh	Daily fuel consumption	Q_{fuel}		kWh
Annual energy consumption	AEC	2,203	kWh	Annual fuel consumption	AFC		GJ

Model		F2300-20					
Model hot water heater		**VVM 500**					
Type of heat pump		☒ Air-water ☐ Exhaust-water ☐ Brine-water ☐ Water-water					
Low-temperature heat pump		☐ Yes ☒ No					
Integrated immersion heater for additional heat		☐ Yes ☒ No					
Heat pump combination heater		☒ Yes ☐ No					
Climate		☒ Average ☐ Cold ☐ Warm					
Temperature application		☒ Average (55 °C) ☐ Low (35 °C)					
Applied standards		EN14825 / EN16147					
Rated heat output	Prated	17.3	kW	**Seasonal space heating energy efficiency**	η_s	122	%
Declared capacity for space heating at part load and at outdoor temperature Tj				*Declared coefficient of performance for space heating at part load and at outdoor temperature Tj*			
Tj = -7 °C	Pdh	13.6	kW	Tj = -7 °C	COPd	2.4	kW
Tj = +2 °C	Pdh	15.9	kW	Tj = +2 °C	COPd	3.1	kW
Tj = +7 °C	Pdh	18.0	kW	Tj = +7 °C	COPd	3.7	kW
Tj = +12 °C	Pdh	20.0	kW	Tj = +12 °C	COPd	4.3	kW
Tj = biv	Pdh	14.0	kW	Tj = biv	COPd	2.6	kW
Tj = TOL	Pdh	12.7	kW	Tj = TOL	COPd	2.2	kW
Tj = -15 °C (if TOL < -20 °C)	Pdh		kW	Tj = -15 °C (if TOL < -20 °C)	COPd		kW
Bivalent temperature	T_{biv}	-5.0	°C	Min. outdoor air temperature	TOL	-10	°C
Cycling interval capacity	Pcych		kW	Cycling interval efficiency	COPcyc		-
Degradation coefficient	Cdh	0.99	-	Max supply temperature	WTOL	65.0	°C
Power consumption in modes other than active mode				*Additional heat*			
Off mode	P_{OFF}	0.002	kW	Rated heat output	Psup	4.6	kW
Thermostat-off mode	P_{TO}	0.017	kW				
Standby mode	P_{SB}	0.015	kW	Type of energy input	Electric		
Crankcase heater mode	P_{CK}	0.032	kW				
Other items							
Capacity control	Fixed			Rated airflow (air-water)		6,000	m^3/h
Sound power level, indoors/outdoors	L_{WA}	35 / 62	dB	Nominal heating medium flow		2.04	m^3/h
Annual energy consumption	Q_{HE}	11,453	kWh	Brine flow brine-water or water-water heat pumps			m^3/h
For heat pump combination heater							
Declared load profile for water heating	XXL			**Water heating energy efficiency**	η_{wh}	95	%
Daily energy consumption	Q_{elec}	10.32	kWh	Daily fuel consumption	Q_{fuel}		kWh
Annual energy consumption	AEC	2,266	kWh	Annual fuel consumption	AFC		GJ

Electrical circuit diagram

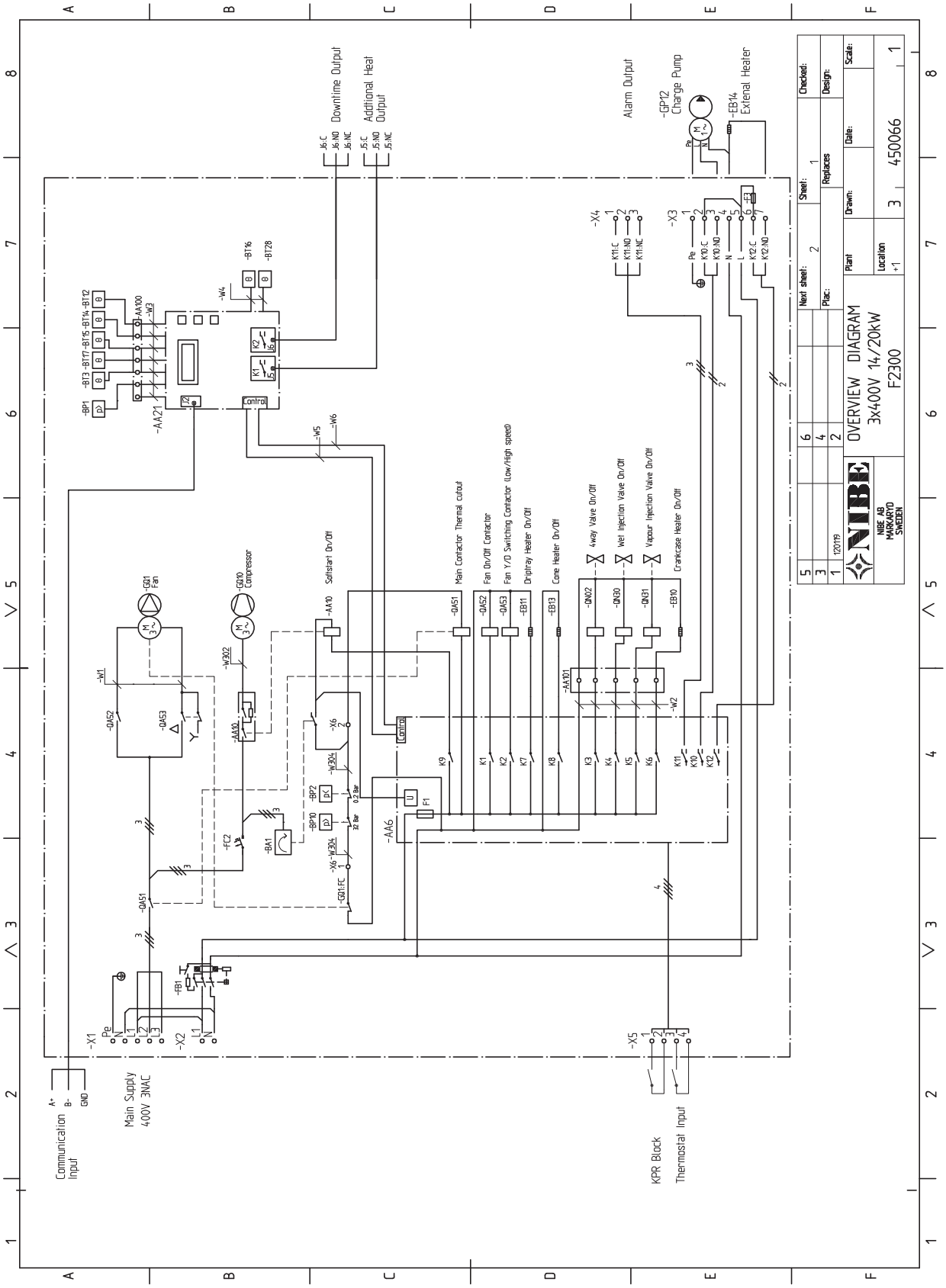

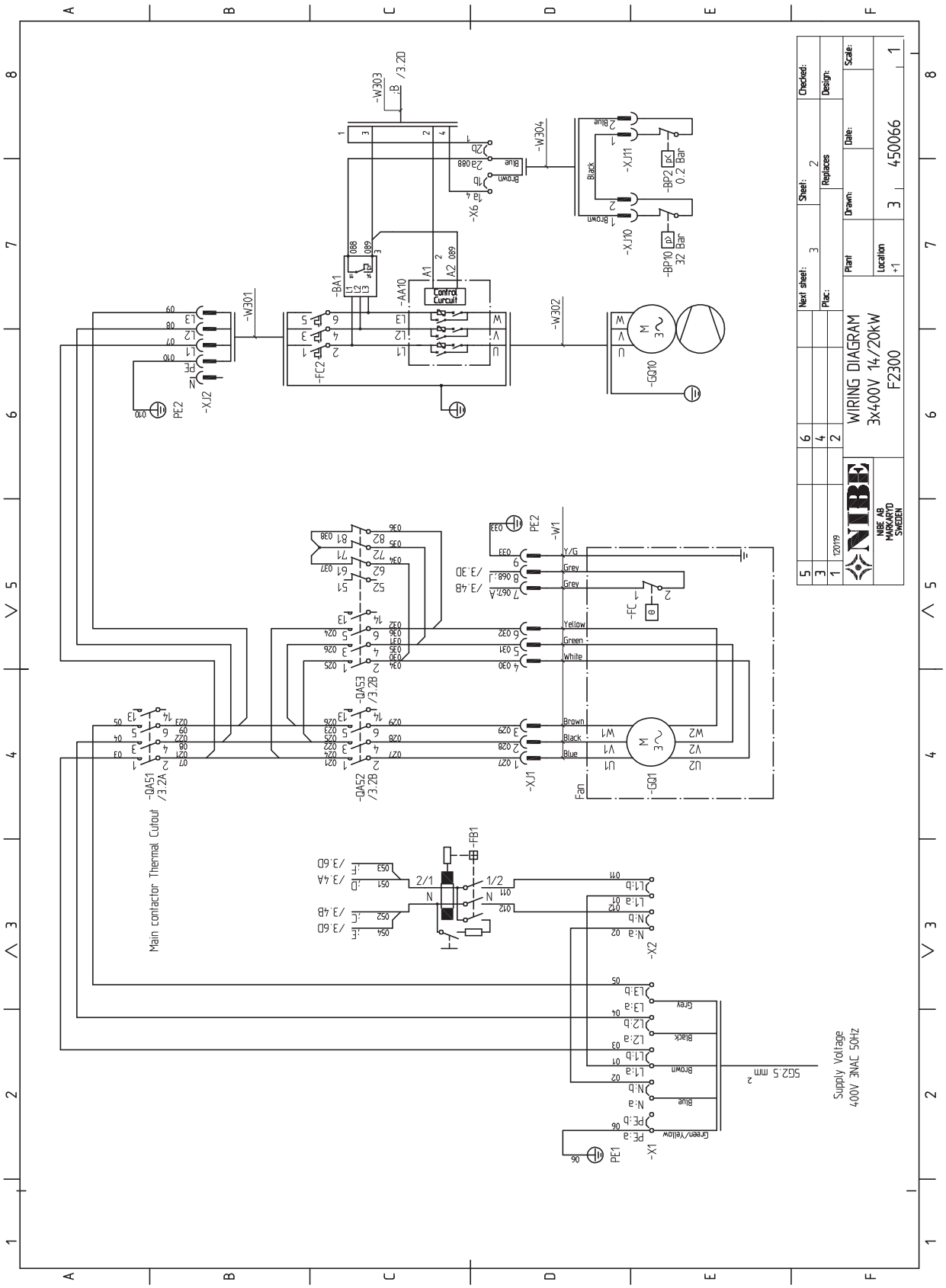
WIRING DIAGRAM
3x400V 14/20kW
F2300
NIBE AB
MARKARYD
SWEDEN
Supply Voltage
400V 3NAC 50Hz
Main contactor Thermal Cutout
Control Curcuit
Fan
Brown
Black
Blue
Grey
Yellow
Green
White
Green/Yellow
Plant
Drawn:
Date:
Scale:
Checked:
Design:
Replaces
Sheet:
Next sheet:
Place:
Location
450066

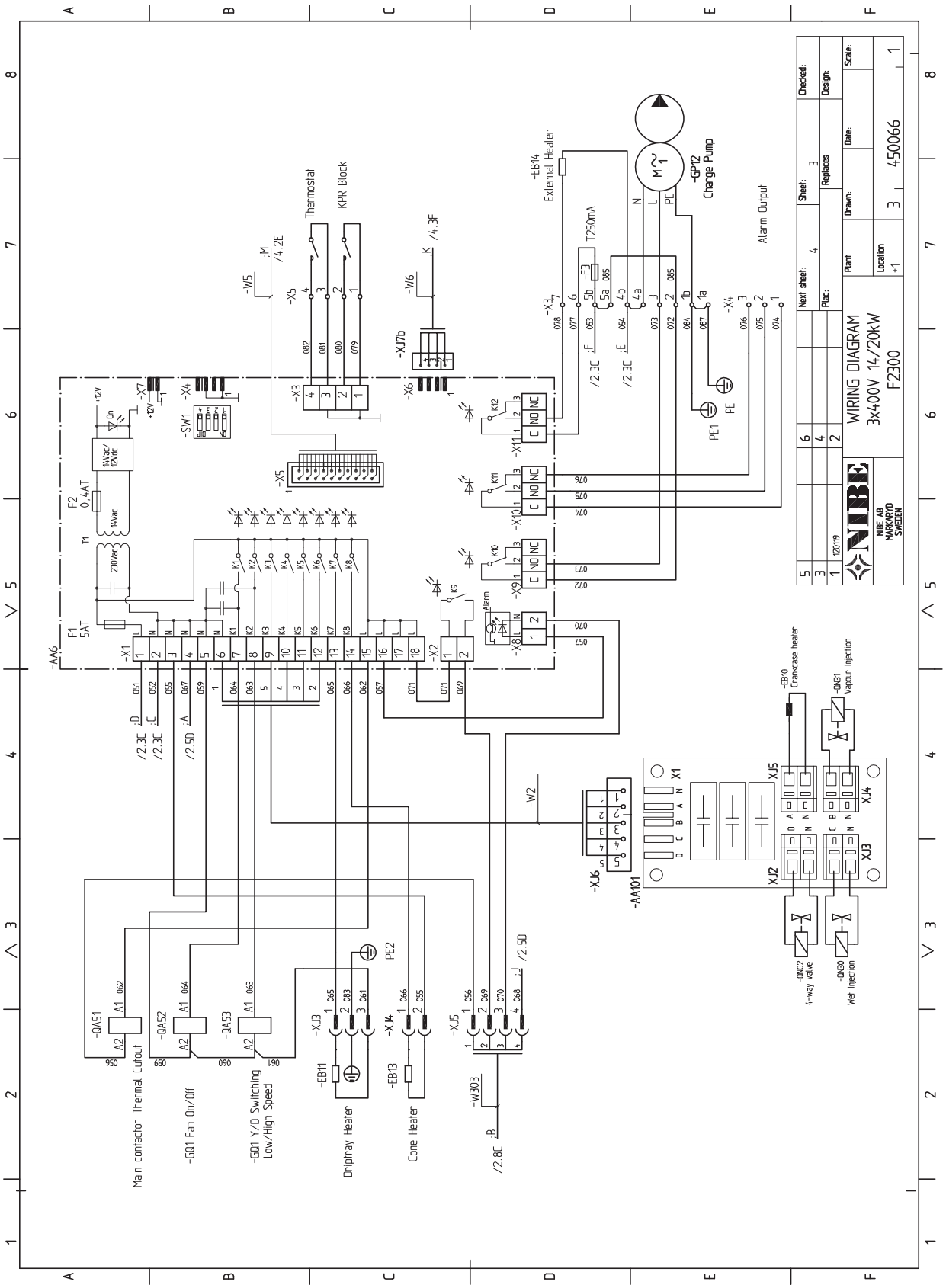
WIRING DIAGRAM
3x400V 14/20kW
F2300
450066
NIBE AB
MARKARYD
SWEDEN
Thermostat
KPR Block
External Heater
Charge Pump
Alarm Output
Main contactor
Thermal Cutout
-GQ1 Fan On/Off
-GQ1 Y/D Switching
Low/High Speed
Drip tray Heater
Cone Heater
Crankcase heater
Vapour Injection
4-way valve
Wet Injection

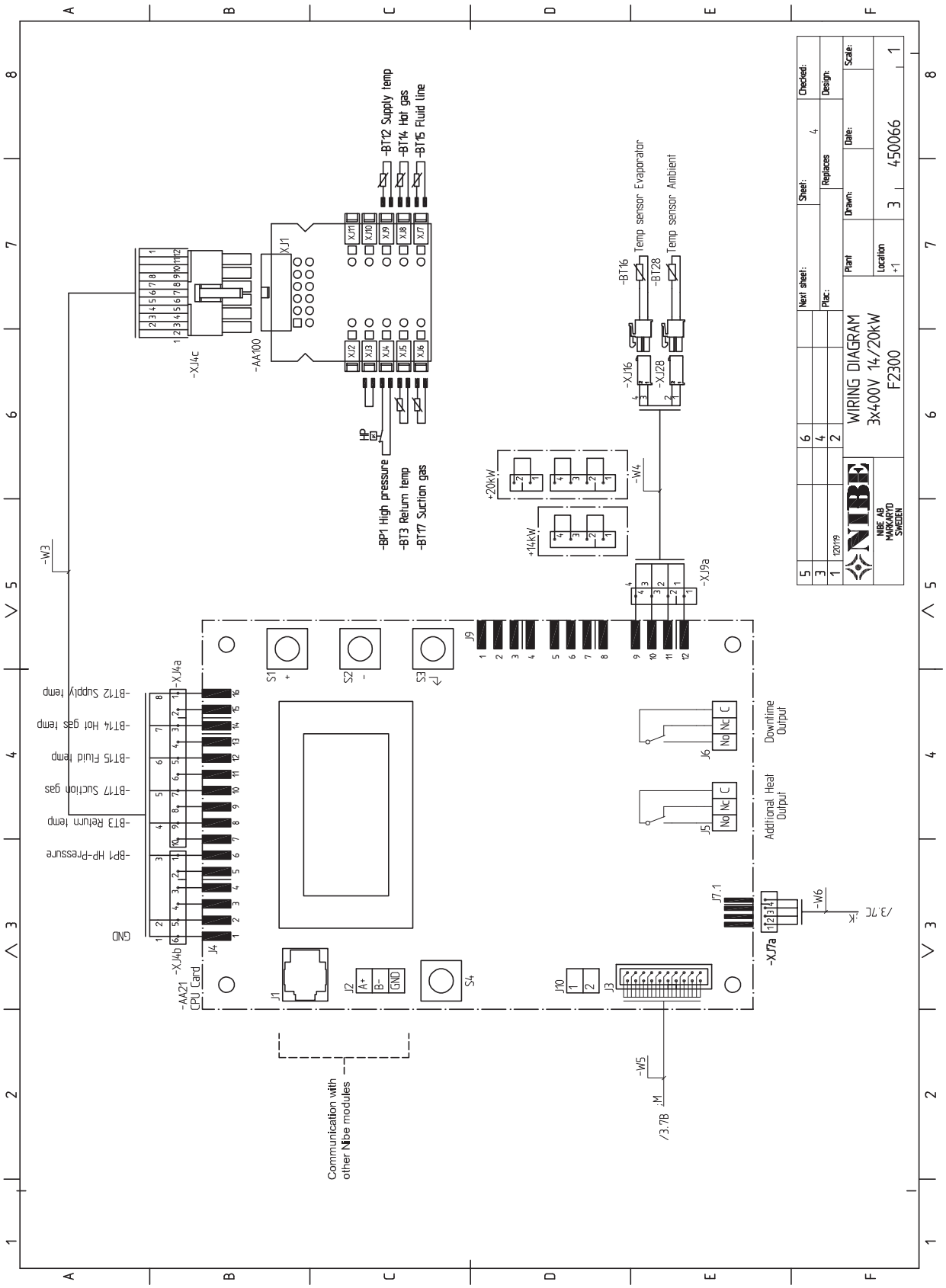
WIRING DIAGRAM
3x400V 14/20kW
F2300
NIBE AB
MARKARYD
SWEDEN
450066
-BT12 Supply temp
-BT14 Hot gas
-BT15 Fluid line
-BP1 High pressure
-BT3 Return temp
-BT17 Suction gas
-BT16 Temp sensor Evaporator
-BT28 Temp sensor Ambient
-AA100
-AA21 CPU Card
Downtime Output
Additional Heat Output
Communication with other Nibe modules
GND

12 Item register

Item register

SE

Återvinning

Lämna avfallshanteringen av emballaget till den installatör som installerade produkten eller till särskilda avfallsstationer.

När produkten är uttjänt får den inte slängas bland vanligt hushållsavfall. Den ska lämnas in till särskilda avfallsstationer eller till återförsäljare som tillhandahåller denna typ av service.

Felaktig avfallshantering av produkten från användarens sida gör att administrativa påföljder tillämpas i enlighet med gällande lagstiftning.

GB

Recovery

Leave the disposal of the packaging to the installer who installed the product or to special waste stations.

Do not dispose of used products with normal household waste. It must be disposed of at a special waste station or dealer who provides this type of service.

Improper disposal of the product by the user results in administrative penalties in accordance with current legislation.

DE

Recycling

Übergeben Sie den Verpackungsabfall dem Installateur, der das Produkt installiert hat, oder bringen Sie ihn zu den entsprechenden Abfallstationen.

Wenn das Produkt das Ende seiner Lebensdauer erreicht hat, darf es nicht über den normalen Hausmüll entsorgt werden. Stattdessen muss es bei speziellen Entsorgungseinrichtungen oder Händlern abgegeben werden, die diese Dienstleistung anbieten.

Eine unsachgemäße Entsorgung des Produkts durch den Benutzer zieht Verwaltungsstrafen gemäß geltendem Recht nach sich.

NIBE AB Sweden
Hannabadsvägen 5
Box 14
SE-285 21 Markaryd
info@nibe.se
www.nibe.eu

231141