Operating Manual UK

NIBE

AIR/WATER

HEAT PUMPS

OUTDOOR INSTALLATION

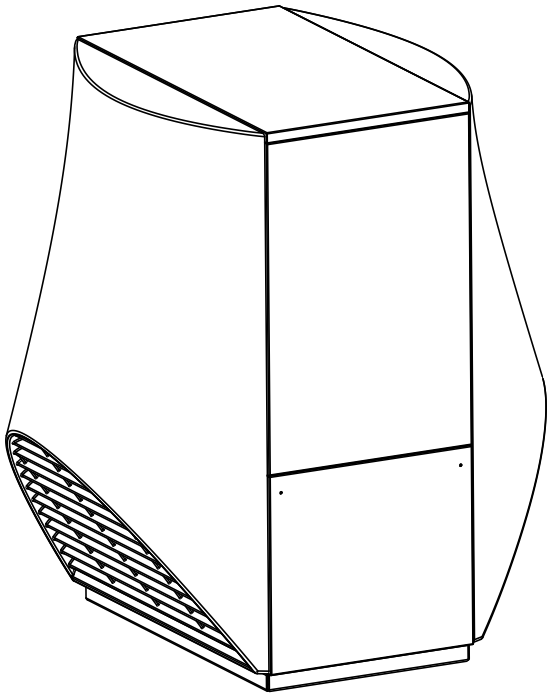

NIBE™ AP-AW30

We reserve the right to make technical changes.
83054206bUK – Translation of the operating manual

Please read first

This operating manual provides important information on the handling of the unit. It is an integral part of the product and must be stored so that it is accessible in the immediate vicinity of the unit. It must remain available throughout the entire service life of the unit. It must be handed over to subsequent owners or operators of the unit.

Read the operating manual before working on or operating the unit. This applies in particular to the chapter on safety. Always follow all instructions completely and without restrictions.

It is possible that this operating manual may contain instructions that seem incomprehensible or unclear. In case of questions or uncertainty, contact the factory customer service department or the manufacturer's local service partner.

Since this operating manual was written for several different models of the unit, always comply with the parameters for the respective model.

This operating manual is intended only for persons assigned to work on or operate the unit. Treat all constituent parts confidentially. The information contained herein is protected by copyright. No part of this operating manual may be reproduced, transmitted, copied, stored in electronic data systems or translated into another language, either wholly or in part, without the express written permission of the manufacturer.

Symbols

The following symbols are used in the operating manual. They have the following meaning:

Information for operators.

Information or instructions for qualified technicians.

DANGER!
Indicates a direct impending danger resulting in severe injuries or death.

WARNING!
Indicates a possibly dangerous situation that could result in severe injuries or death.

CAUTION!
Indicates a possibly dangerous situation that could result in medium or light injuries.

ATTENTION
Indicates a possibly dangerous situation, which could result in property damage.

NOTICE.
Emphasized information.

ENERGY SAVING TIP
Indicates suggestions that help to save energy, raw materials and costs.

Reference to other sections of the operating manual.

Reference to other instructions of the manufacturer.

Contents

INFORMATION FOR OPERATORS AND QUALIFIED SPECIALISTS

PLEASE READ FIRST 2
SYMBOLS 2
INTENDED USE 4
EXCLUSION OF LIABILITY 4
EC CONFORMITY 4
SAFETY 4
CUSTOMER SERVICE 5
WARRANTY / GUARANTEE 5
DISPOSAL 5
OPERATING PRINCIPLE OF HEAT PUMPS 6
AREA OF UTILIZATION 6
HEAT QUANTITY RECORDING 6
OPERATION 6
CARE OF THE UNIT 7
MAINTENANCE OF THE UNIT 7
Cleaning and rinsing of unit components 7
MALFUNCTIONS 7

INSTRUCTIONS FOR QUALIFIED TECHNICIANS

SCOPE OF DELIVERY 8
INSTALLATION AND ASSEMBLY 8
Installation location 9
Transport to installation location 9
Installation 9
Attaching the air flow baffles 10
Installation / connection to heating circuit 12
Condensate discharge 13
PRESSURE RELIEF 13
OVERFLOW VALVE 13
BUFFER TANK 14
CIRCULATING PUMPS 14
WATER HEATING 14
HOT-WATER TANK 14
ELECTRICAL CONNECTIONS 14
RINSING, FILLING AND BLEEDING THE SYSTEM 16
Water quality of the fill and additional water in hot water heating systems 17
INSULATING THE HYDRAULIC CONNECTIONS 18
COMMISSIONING 18
Safety temperature limiter 19
DISMANTLING 19
TECHNICAL DATA / SCOPE OF DELIVERY
AP-AW30-25E - AP-AW30-31E 20
PERFORMANCE CURVES
HEATING CAPACITY/COP / POWER CONSUMPTION / HEAT PUMP PRESSURE LOSS
AP-AW30-25E 22
AP-AW30-31E 23
SOUND PRESSURE LEVEL 24
DIMENSIONAL DRAWINGS
AP-AW30-25E 25
AP-AW30-31E 26
INSTALLATION PLANS
AP-AW30-25E 27
AP-AW30-31E 28
TERMINAL PLANS
AP-AW30-25E 30
AP-AW30-31E 31
CIRCUIT DIAGRAMS
AP-AW30-25E 32
AP-AW30-31E 35

APPENDIX

EC DECLARATION OF CONFORMITY 37

Intended use

The unit may be used only for the intended use. This means:

- for heating.
- for heating hot water.

The unit may be operated only within its technical parameters.

☞ Overview "Technical data/scope of delivery".

NOTICE.:
Notify the responsible power supply company of the use of a heat pump or heat pump system.

CAUTION!
The unit is not suitable for use in IT network systems.

Exclusion of liability

The manufacturer will not be liable for damage resulting from unauthorized use of the unit.

The manufacturer's liability will also be voided in the following cases:

- if work is performed on the unit and its components in a manner that does not comply with the terms of this operating manual;
- if work is performed on the unit and its components in an improper manner;
- if work is performed on the unit that is not described in this operating manual, and this work was not expressly approved in writing by the manufacturer;
- if the unit or components in the unit are modified, redesigned or removed without the express written permission of the manufacturer.

EC conformity

The unit bears the CE mark of conformity.

☞ EC declaration of conformity

Safety

The unit is operationally safe when used for the intended purpose. The construction and design of the unit conform to the state of the art, all relevant DIN/VDE regulations and all relevant safety regulations.

Every person who performs work on the unit must have read and understood the operating manual prior to starting any work. This also applies if the respective person has already worked with such a unit or a similar unit or has been trained by the manufacturer.

Every person who performs work on the unit must comply with the applicable accident prevention and safety regulations. This applies in particular to the wearing of personal safety gear.

DANGER!
Danger of fatal injury due to electric current!
Electrical connections may be installed only by qualified electricians.

Before opening the unit, disconnect the system from the power supply and secure it from being switched back on!

ATTENTION
If using the unit in 3~230V systems, please note that the residual-current circuit breaker (RCCB) used must be AC-DC sensitive.

WARNING!
Only qualified technicians (trained heating, cooling, and electrical technicians) may perform work on the unit and its components.

WARNING!
Observe safety labels on and in the unit.

WARNING!
Unit contains refrigerants!
Leaking refrigerant could result in personal injury or material damage. Therefore:

- **Shut down unit.**
- **Notify the manufacturer's authorized service center.**

ATTENTION
For safety reasons:
Never disconnect the unit from the power supply, unless the unit is being opened.

ATTENTION
Install the heat pump only outdoors and operate only with outside air as the heat source. Do not restrict or block the air-conducting sides.

☞ Dimensional drawing and installation plan for respective unit model.

WARNING!
Never switch on unit if air flow baffles on the unit are removed.

ATTENTION
The integration of the heat pump in ventilation systems is not permissible. The use of the cooled air for cooling purposes is not permitted.

ATTENTION
The ambient air in the location where the heating pump is installed and also the intake air which is used as a source of heat must not contain any kind of corrosive components!
Components such as ammonia, sulphur, chlorine, salt, sewer gas, flue gases etc. may cause damage leading to complete failure or even a total write-off of the heating pump!

CAUTION!
In the air outlet area the air temperature is ca. 5 K below the ambient temperature. Under certain climatic conditions, therefore, an ice layer can form in the air outlet area. Install the heat pump so that the air blower does not blow in the direction of footpaths.

Customer service

For technical assistance, please contact your qualified technician or the manufacturer's local service partner.

☞ Overview "Customer service".

Warranty / Guarantee

For warranty and guarantee conditions, please refer to the purchase documents.

NOTICE.:
Please contact your dealer concerning warranties and guarantees.

Disposal

When decommissioning the unit, always comply with applicable laws, directives and standards for the recovery, recycling and disposal of materials and components of cooling units.

☞ "Dismantling".

Operating principle of heat pumps

Heat pumps operate on the principle of a refrigerator: the same technology, only with the opposite effect. The refrigerator extracts heat from foods, which is released into the room through fins on the back.

The heat pump extracts heat from our environment: air, earth or water. The extracted heat is conditioned in the unit and supplied to the heating water. Even when it is extremely cold outside, the heat pump draws enough heat to heat a house.

Example: drawing of a brine/water heat pump with floor heating:

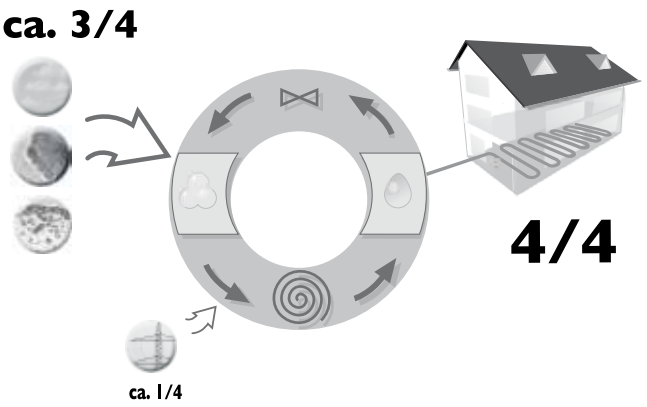

4/4 = usable energy
ca. 3/4 = environmental energy
ca. 1/4 = external electrical energy

Area of utilization

Taking into consideration the ambient conditions, limits of application and the applicable regulations, every heat pump can be utilized in new or existing heating systems.

Overview "Technical data/scope of delivery".

Heat quantity recording

In addition to the proof of the unit's efficiency, EEWaermeGalso meets the demand for a heat quantity recording (hereafter refered to as HQR). The HQR is mandatory with air/water heat pumps. With brine/water and water/water heat pumps, a HQR may only be set up when a forward flow temperature of ≥35 °C has been reached. The HQR must record the total warm energy release (heating and hot water) in the building. In heat pumps with heat quantity recording, the analysis is conducted by the regulator. The regulator displays the thermal energy that is exchanged from the heating system in kWh.

Operation

Your decision to purchase a heat pump or a heat pump system is a long-term contribution to protecting the environment through low emissions and reduced primary energy use.

You can operate and control the heat pump system with the control element of the heating and heat pump regulator.

NOTICE.:
Make sure that the control settings are correct.

Operating manual of the heating and heat pump regulator.

To ensure that your heat pump or heat pump system operates efficiently and ecologically, the following are especially important:

ENERGY SAVING TIP
Avoid unnecessarily high flow temperatures.
A lower flow temperature on the hot water side increases the efficiency of the system.

ENERGY SAVING TIP
When letting in fresh air, do not leave windows open for an extended period, thus saving energy and reducing your heating costs.

Care of the unit

The outer surfaces of the unit can be cleaned with a damp cloth and household cleaning products.

Do not use cleaning or care products that contain abrasives, acids and/or chlorine. Such products would destroy the surfaces and could also damage the technical components of the unit.

Maintenance of the unit

The cooling circuit of the heat pump requires no regular maintenance.

According to EU regulation (EC) 842/2006 of May 17, 2006, leak inspections and maintenance of a log book are required by law for certain heat pumps!

The criteria for conducting leak inspections and maintaining a log book are based on the hermetic impermeability of the cooling circuit and the refrigerant capacity of the heat pump! No log book is required for heat pumps with a refrigerant capacity of < 3kg. With all other heat pumps, the log book is included with all other delivered materials.

Log book for heat pumps, Section "Information on use of the log book".

The components of the heating circuit and the heat source (valves, expansion vessels, circulating pumps, filters, dirt traps) should be inspected as well as cleaned as needed - at the very least annually - by a qualified heating or cooling system technician.

The intake and blow-out openings must be inspected for dirt at regular intervals (depending on the installation location) and cleaned, if necessary.

ATTENTION
Check regularly to ensure that the condensate can drain out of the unit unobstructed. To this end, regularly check the condensate pan in the unit and the condensate drain to ensure that they are clean / free from obstructions and clean as needed.

Icing of the protective grating
When temperatures fall below freezing and high levels of humidity are present, ice can form on the protective grating of the air flow baffles. In order to ensure problem-free operations, the ice must be removed on a regular basis.

It is a good idea to have a maintenance contract with a heating installation company. The company will conduct the required maintenance at regular intervals.

CLEANING AND RINSING OF UNIT COMPONENTS

CAUTION!
Unit components may be cleaned and rinsed only by customer service personnel authorized by the manufacturer. Use only liquids recommended by the manufacturer.

Rinsing of the liquefier with chemical cleaning agents must be followed by neutralization of residue and intensive rinsing with water. Always observe the technical data of the manufacturer of the heat exchanger.

Malfunctions

In the event of a malfunction, you can detect the cause of the malfunction via the diagnostic program of the heating and heat pump regulator.

Operating manual of the heating and heat pump regulator.

WARNING!
Service and repair work on the components of the unit may be performed only by customer service personnel authorized by the manufacturer.

Overview "Customer service".

Note that no malfunction is displayed if the safety temperature limiter on the electric heating element has been triggered (depending on unit model).

"Commissioning", "Safety temperature limiter" section.

Scope of delivery

AP-AW30-25E THROUGH AP-AW30-31E (TWO PACKING UNITS):

Packing unit 1:

Air flow baffles (quantity of 2, each in a separate box)

Packing unit 2:

Basis unit (this illustration shows an example. AP-AW30-25E with fully hermetically enclosed compressor, all safety-related components for monitoring of cooling circuit and hose for condensate discharge (connected on heat pump side).

① Inspect delivery for outwardly visible signs of damage…

② Check to make sure that delivery is complete… Any defects or incorrect deliveries must be claimed immediately.

NOTICE.
Note the model.

☞ Overview "Technical data/scope of delivery".

ACCESSORIES NECESSARY FOR OPERATION

ATTENTION
Use only original accessories from the manufacturer of the unit.

The heating and heat pump regulator and the control and sensor wires are necessary for operation of the unit and must be ordered separately.

The heat pump is a functioning unit only with the heating and heat pump regulator and the control and sensor wires.

Heating and heat pump regulator (for wall mounting)

Control and sensor wires are available in various lengths, as required.

ADDITIONAL ACCESSORIES

The installation accessories (vibration decouplers) for air/water outdoor installation heat pumps must be ordered separately.

With the AP-AW30-31E, you must select the electrical heating element for the specific system and order it separately.

Installation and assembly

Observe the following when performing all work:

NOTICE:
Always comply with applicable accident prevention regulations, statutory regulations, ordinances and directives.

WARNING!
The heat pump or heat pump system may be installed and assembled only by a qualified technician!

NOTICE:
Observe the sound levels of the respective model.

Overview "Technical data/scope of delivery", "Sound" section and "Sound level" overview.

INSTALLATION LOCATION

ATTENTION
Install the unit only outdoors.

Dimensional drawing and installation plan for respective unit model.

TRANSPORT TO INSTALLATION LOCATION

To prevent damage during transport, always transport the unit to final installation location in its original packaging, using a lifting truck, forklift or crane.

WARNING!
Several people are required to transport the unit. Do not underestimate the weight of the unit.

Overview "Technical data/scope of delivery", "General unit data" section.

WARNING!
Unit is not fastened to the wooden pallet. Danger of tipping over during transport! This can result in personal injury and damage to the unit.

- **Take suitable precautionary measures to eliminate the danger of tipping.**

ATTENTION
Never use components and hydraulic connections on the unit for purposes of transport.

ATTENTION
Do not damage the hydraulic connections under any circumstances.

ATTENTION
Do not tilt the unit more than a maximum of 45° (in any direction).

INSTALLATION

Place the unit on a solid, level foundation that is capable of bearing weight. Make sure that the foundation is designed for the weight of the heat pump. Materials that meet this requirement can be used for the foundation (concrete, stone slabs, etc.). The ground surface in the air outlet area of the heat pump must be permeable to water.

ATTENTION
In the air outlet area the air temperature is ca. 5 K below the ambient temperature. Under certain climatic conditions, therefore, an ice layer can form in the air outlet area.
Install the heat pump so that the air blower does not blow in the direction of footpaths.

WARNUNG
Several people are required to install the unit.

NOTICE.:
Always observe the installation plan for the respective unit model. Note the size and minimum clearances.

Installation plan for respective unit model.

NOTICE
Set up the unit so that the switch cabinet side (= operating side) is accessible at all times.

LIFTING THE UNIT WITH A CRANE

NOTICE
Models must be lifted using a crane.

Proceed as follows:

① Remove side laths on the wooden pallet…

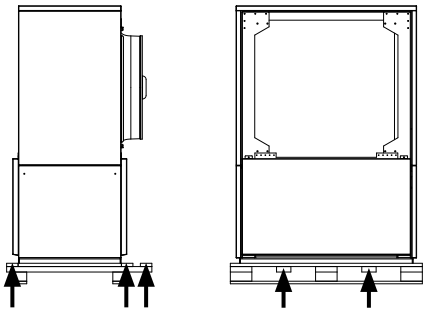

② Guide lifting straps under the unit. Insert laths or beams between the lifting straps and the unit in order to prevent damage to the housing, or remove facing panels (see removal instructions under "Attaching air flow baffles")…

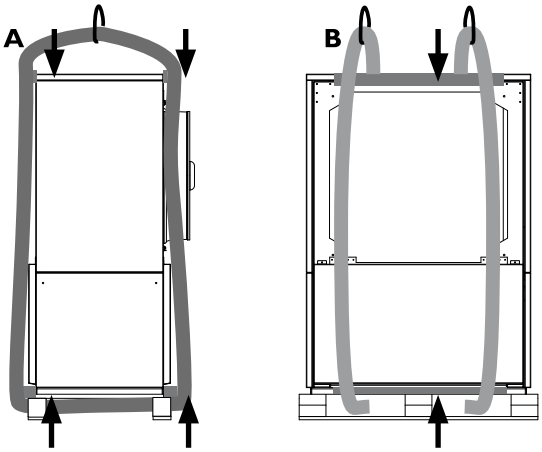

A Front view (operator side)
B Side view 1

WARNING!
Lifting straps should not be too close together or too near the center; otherwise the unit may tip!

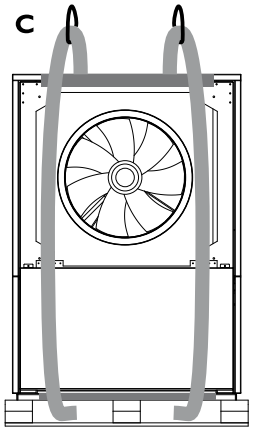

C Side view 2

ATTENTION
Guide lifting straps past the fan on the side. Make sure the straps do not press against the ventilator during transport.

③ Lift unit with the crane and place on the base. Make sure that the frame of the unit is in full contact with base.

ATTACHING THE AIR FLOW BAFFLES

WARNING!
Unit has rotating parts.
For safety reasons, mount the two air flow baffles on the unit before continuing with any other work.

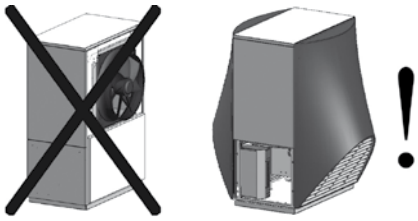

① If you have not already done so, remove lower facing panels on the switch cabinet and water connection side of the unit…

①•①

To do so, loosen the two quick-release screws on the lower facing panels…

①•②

Pull each facing panel forward, detach from the unit and set securely aside…

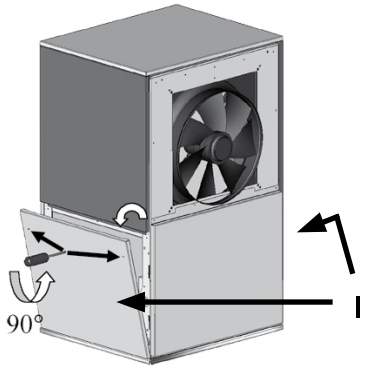

1 lower facing panels

② Remove upper facing panels from unit…

②•①

To do so, loosen the two screws on the lower edges of the upper facing panels…

②•②

Pull each facing panel downward and forward, detach from top cover of unit and set securely aside…

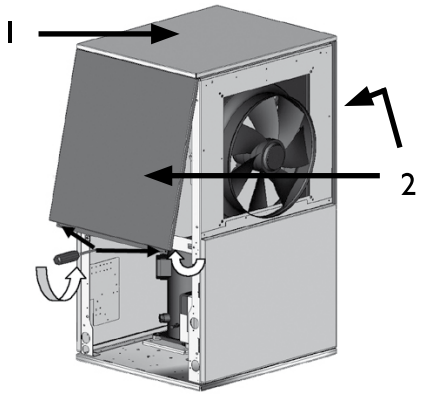

1 top cover of unit
2 upper facing panels

③ The top cover of the unit was fastened by the upper facing panels. After removal of the upper facing panels, the top cover is loose. Remove top cover and set securely aside…

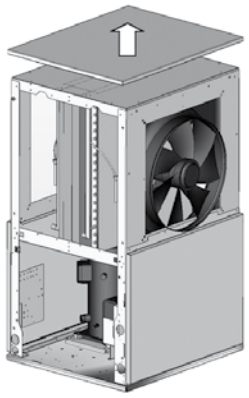

④ Install air flow baffles…

! ATTENTION
Remove the protective sheeting from the air flow baffles before installation

④•①

Suspend air flow baffles on the brass bushings on the top side of the frame…

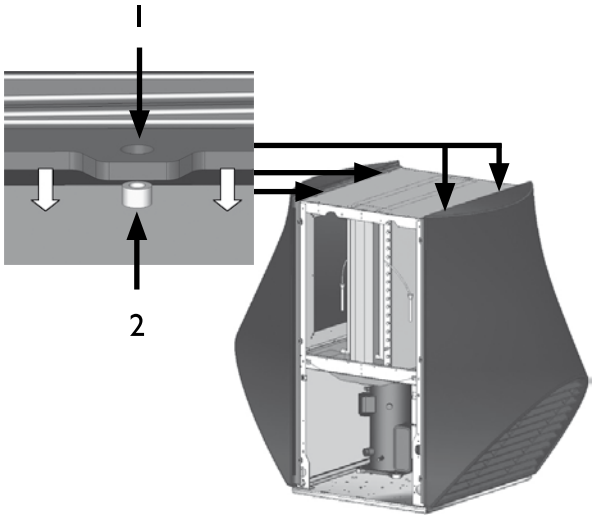

1 eyelet on air flow baffle
2 brass bushing on frame

④•②

Bolt air flow baffles to the frame on the switch cabinet side (= operator side) and water connection side…

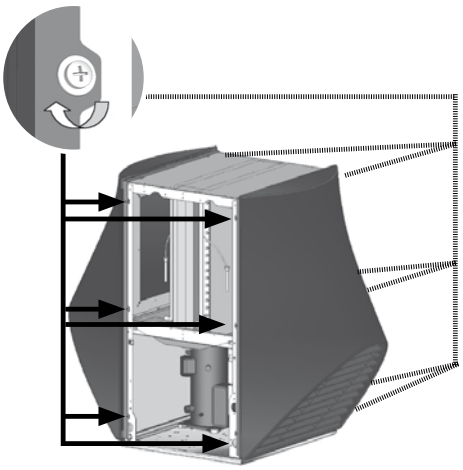

⑤ Return top cover to frame…

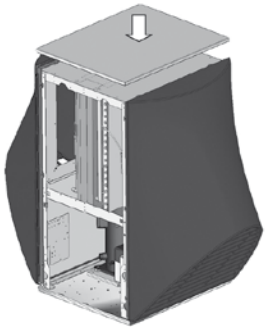

⑥ Suspend upper facing panels in the top cover. Bolt to the frame at bottom…

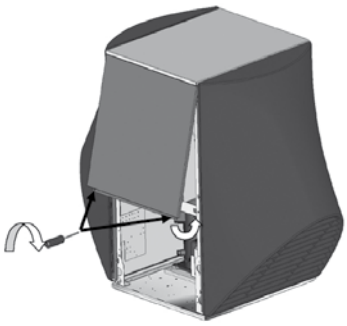

The air flow baffles are now installed. You can now carry out mounting and installation work on the unit, and afterwards attach the lower facing panels. (see "Electrical connection work", "Heat pump side connection of control and sensor wires") ⑥)…

ATTENTION
During extended interruptions in work, close the unit with the lower facing panels.

INSTALLATION / CONNECTION TO HEATING CIRCUIT

DANGER!
Danger of fatal injury due to electric current!
Before opening the unit, disconnect the system from the power supply and secure it from being switched back on!

ATTENTION
Connect the unit to the heating circuit according to the hydraulic diagram for the respective model.

"Hydraulic connection" instructions.

NOTICE:
Check to make sure that the diameters and lengths of the pipes for the heating circuit (including the ground lead between the heat pump and the building!) are sufficiently dimensioned.

NOTICE:
Circulating pumps must be multi-stage. They must be able to deliver at least the minimum hot water flow rate required for your model.

Overview "Technical data/scope of delivery", "Heating circuit" section.

ATTENTION
The hydraulic system must be equipped with a buffer tank, the required volume of which depends on the model of your unit.

ATTENTION
When installing the connections, always secure the connections on the unit from twisting, in order to prevent damage to the copper pipes in the interior of the unit.

① Rinse heating circuit thoroughly prior to connecting the unit to the heating circuit…

NOTICE:
Contamination and deposits in the heating circuit can cause malfunctions.

② Install shut-off devices for the hot water outflow (forward flow) and hot water inflow (return flow) on the heat pump side…

NOTICE:
During installation of the shut-off devices, the evaporator and liquefier of the heat pump can be rinsed, if necessary.

CAUTION!
The condenser may be rinsed only by customer service personnel authorized by the manufacturer.

③ Connect the unit to the pipes of the heating circuit via vibration decouplers. They must be installed in order to prevent damage from vibrations to the pipes.

NOTICE:
Vibration decouplers are available as accessories.

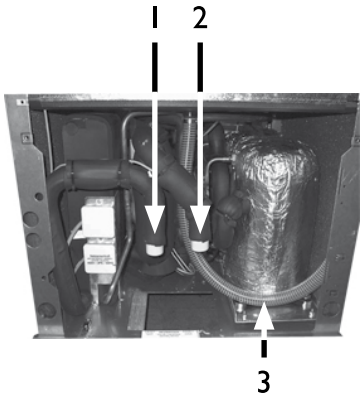

1 Hot water inflow (return flow) connection
2 Hot water outflow (forward flow) connection
3 Condensate water hose

④ Install the condensate water hose in the unit so that there is no contact with refrigerant pipes…

⑤ Make sure that frost-free condensate discharge is ensured…

☞ Installation plan for respective unit model.

⑥ Seal empty pipes on unit side.

CONDENSATE DISCHARGE

The condensate from the air must be discharged frost-free via a condensate pipe with a minimum diameter of 50 mm. For underlying surfaces that are permeable to water, it is sufficient to insert the condensate pipe vertically at least 90 cm into the ground. If the condensate is discharged into drainage or sewage systems, install frost-free with gradient.

Discharge of the condensate into the sewage system is permitted only via a funnel siphon, which must be accessible at all times.

Pressure relief

Equip the heating circuit in accordance with local standards and directives with a safety valve and an expansion tank.

Also install filling and emptying devices, shut-off devices and non-return valves in the heating circuit.

Overflow valve

Use an overflow valve for tanks integrated in series to ensure the minimum flow rate of the heating circuit volume flow through the heat pump. The overflow valve must be dimensioned so that the minimum flow rate of the volume flow through the heat pump is ensured when the heating circuit is shut off.

Buffer tank

The hydraulic connection of the heat pump requires a buffer tank in the heating circuit. The required volume of the buffer tank is calculated based on the following formula:

$$V_{\text{buffer tank}} = \frac{\text{Minimum flow rate of heat circuit volume flow / hour}}{10}$$

For the minimum flow rate of the heat circuit volume flow, see overview "Technical data/ Scope of delivery", "Heating circuit" section.

In mono-energetic air/water systems, integrate the buffer tank in the heating water outflow (forward flow) before the overflow valve.

Circulating pumps

CAUTION.
Always note the model.

Do not use regulated circulating pumps.

Circulating pumps and domestic hot water circulation pumps must be multi-stage pumps.

Water heating

Water heating with the heat pump requires an additional hot water circuit, parallel to the heating circuit. Make sure that the heating water charge is not channeled through the buffer tank of the heating circuit.

"Hydraulic connection" instructions.

Hot-water tank

If the heat pump will be used for heating hot water, you must integrate special hot-water tanks in the heat pump system. The storage volume must be sufficient so that the required hot water quantity is available even during a power outage.

NOTICE.:
The heat exchanger surface of the hot water tank must be dimensioned so that the heating capacity of the heat pump is transferred with minimal spreading.

We offer a variety of hot-water tanks for you to choose from. They are optimized for use with your heat pump.

NOTICE.:
Integrate the hot-water tank in the heat pump system corresponding to the hydraulic diagram for your system.

Electrical connections

Observe the following when performing all work:

DANGER!
Danger of fatal injury due to electric current!
Electrical connections may be installed only by qualified electricians.

Before opening the unit, disconnect the system from the power supply and secure it from being switched back on!

WARNING!
Observe the relevant EN, VDE and/or applicable local safety regulations during the installation and during all electrical work.

Comply with technical connection requirements of the responsible power supply company (if required by the latter)!

POWER CONNECTION

It is not necessary to open the electric switch cabinet in order to connect the power to the heat pump. The power is connected at the connection boxes on the water connection side.

Proceed as follows:

① If the unit is closed, open facing panels…

☞ "Preparing for installation"

② Open connection boxes…

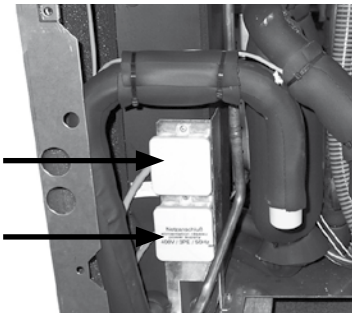

1 Connection box for electric heating element
2 Connection box for compressor

③ Connect power cable to the connection box (Electric heating element with the AP-AW-31E on-site)…

④ Close connection box…

⑤ Install power cable in a conduit as far as where it enters the building and from there on to the fuse box…

⑥ Connect power cable to power supply.

! ATTENTION
Ensure clockwise rotary field of the load power supply (compressor).
– An incorrect rotary field of the compressor during operation can cause serious, irreparable damage to the compressor.

! ATTENTION
Make sure to equip the power supply of the heat pump with a 3-pole automatic cut-out with at least 3mm contact gap.

Note the level of the release current.

☞ Overview "Technical data/scope of delivery", "Electric" section.

! ATTENTION
If using the unit in 3~230V systems, please note that the residual-current circuit breaker (RCCB) used must be AC-DC sensitive.

HEAT PUMP SIDE CONNECTION OF THE CONTROL AND SENSOR WIRES

The heat pump is connected to the heating and heat pump regulator by means of the control and sensor wires. They are connected at the electric switch cabinet on the switch cabinet side (= operator side) of the heat pump.

Proceed as follows:

① Screw control and sensor wires to the two connectors on the side of the electric switch cabinet…

② Guide control and sensor wires inside the unit through the provided cable duct to the water connection side…

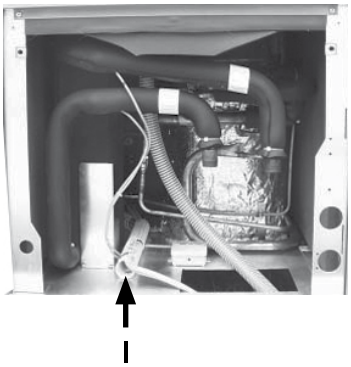

I Cable duct for control and sensor wires

③ Guide control and sensor wires out of the unit…

NOTICE.:
In order to enable unhinging of the electric switch cabinet in the event that customer service is necessary, the control and sensor wires in the heat pump must have an excess length of about 15 cm

NOTICE.:
Electric heating element is connected for 6 kW (9 kW) at factory. It can be connected for 2(3) or 4 kW (6 kW) on the contactor Q5 (Q6).

For further information, see the adhesive label on the electric heating element.

④ Install control and sensor wires in a conduit as far as where they enter the building and from there on to the heating and heat pump regulator…

⑤ Connect control and sensor wires to the heating and heat pump regulator according to the terminal connection diagram and the circuit diagrams for the respective model…

"Terminal diagrams" and "Circuit diagrams" for the respective model.

Operating manual of the heating and heat pump regulator.

⑥ Seal empty pipes on unit side…

⑦ Screw facing panels onto the heat pump…

Place lower facing panels diagonally into the frame, close at top and fasten with in quick-release screws…

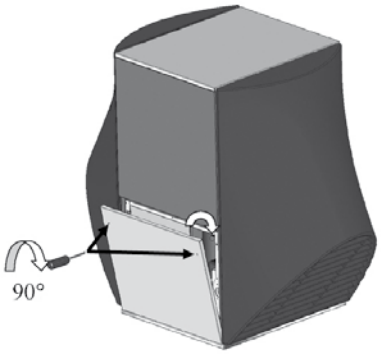

The unit is now closed.

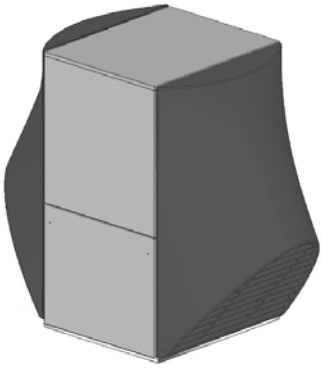

Rinsing, filling and bleeding the system

ATTENTION
The system must be absolutely free from air before commissioning.

WATER QUALITY OF THE FILL AND ADDITIONAL WATER IN HOT WATER HEATING SYSTEMS

ACCORDING TO VDI 2035 PART I AND II

Use of modern, energy-efficient heat pump systems is becoming increasingly widespread. Their ingenious technology enables these systems to achieve very good efficiencies. The decreasing space available for heat generators has led to the development of compact units with increasingly smaller cross-sections and high capacities. This means the complexity of the systems and the material diversity are also increasing, which plays an important role especially in their corrosion behaviour. The heating water not only affects the efficiency of the system, but also the life of the heat generator and the heating components of a system.

The guide values of VDI 2035 Part I and Part II must therefore be complied with as minimum requirements for proper operation of the systems. Our practical experience has shown that the safest and most trouble-free running of the systems is achieved with so-called low-salt operation.

VDI 2035 Part I gives important information and recommendations regarding scaling and its prevention in heating and domestic hot water heating systems.

VDI 2035 Part II primarily deals with the requirements for reducing heating water corrosion in hot water heating systems.

PRINCIPLES OF PART I AND PART II

The occurrence of scaling and corrosion damage in hot water heating systems is low, if

- proper planning and commissioning is carried out
- the system is closed in corrosion terms
- adequately dimensioned pressurising is integrated
- the guide values for the heating water are complied with
- and regular servicing and maintenance are carried out.

A system log should be kept, in which the relevant planning data is entered (VDI 2035).

DAMAGE THAT CAN OCCUR IN CASE OF NON-COMPLIANCE

- Malfunctions and the failure of components (e.g. pumps, valves)
- Internal and external leaks (e.g. from heat exchangers)
- Cross-section reduction and blockaging of components (e.g. heat exchanger, pipes, pumps)
- Material fatigue
- Gas bubbles and gas cushion formation (cavitation)
- Negative effect on heat transfer (formation of coatings, deposits) and associated noises (e.g. boiling noises, flow noises)

LIMESCALE – THE ENERGY KILLER

Filling with untreated drinking water inevitably leads to the precipitation of all calcium as scale. The consequence: limescale deposits form on the heat transfer surfaces of the heating. The efficiency falls and the energy costs rise. A rule of thumb is that 1 millimetre of limescale deposit causes an energy loss of 10%. In extreme cases it can even cause damage to the heat exchangers.

WATER SOFTENING TO VDI 2035 – PART I

If the water is softened before the heating is filled, in accordance with the VDI 2035 guidelines, no scale can form. This effectively and permanently prevents limescale deposits and the resulting negative effects on the entire heating system.

CORROSION – AN UNDERESTIMATED PROBLEM

VDI 2035, Part II, deals with the problem of corrosion. Softening the heating water can prove to be insufficient. The pH value can significantly exceed the limit of 10. pH values higher than 11 can set in, which even damage rubber seals. The VDI 2035, Part I guidelines are fulfilled, however, VDI 2035, Part 2 suggests a pH value between 8.2 and maximum 10.

If aluminium materials are used, which is the case in many modern heating systems, a pH value of 8.5 must not be exceeded, because otherwise there is a threat of corrosion – and aluminium is attacked without the presence of oxygen. Therefore, apart from softening the heating fill and additional water, the heating water should also be appropriately conditioned. This is the only way to comply with the VDI 2035 requirements and

the recommendations and installation instructions of the heat pump manufacturer.

Part 2 of VDI 2035 also points out the reduction in total salt content (conductivity). The risk of corrosion is far lower if deionised water is used than is the case if the system is operated with salty, i.e. softened water.

Even if the water has been softened beforehand, it contains dissolved, corrosion-promoting salts, which act as electrolytes due to the use of different materials in the heating system and therefore accelerate corrosion processes. This can ultimately result in pitting.

Contamination and deposits in the heating circuit can cause malfunctions

RINSE, FILL AND BLEED THE HEATING CIRCUIT AND HOT WATER BUFFER TANK

To bleed the hot water tank, the heating circuit and hot water circuit must be rinsed simultaneously.

ON THE SAFE SIDE WITH LOW-SALT OPERATION

The problems listed above do not occur at all with low-salt operation, as neither corrosive salts such as sulphates, chlorides and nitrates nor alkalising sodium hydrogen carbonate are in the heating water. The corrosive properties of deionised water are very low and in addition, fur cannot form in the boiler. This is the ideal approach for closed heating circuits, in particular, because low oxygen input into the heating circuit can also be tolerated.

In general, when the system is filled with deionised water, the pH value sets itself within the ideal range due to "self-alkalinisation". If necessary, a pH value of 8.2 can be very easily alkalised by adding chemicals. In this way, optimum protection of the entire heating system is achieved.

MONITORING

Analytical recording and monitoring of the relevant water values and the added active conditioning substances is of decisive importance. Therefore, they should be monitored regularly using appropriate water test equipment.

Insulating the hydraulic connections

Insulate the vibration decouplers and the outside pipes of the heating circuit so that they are sealed against vapor diffusion.

NOTICE:
Insulate in accordance with applicable local standards and directives.

ATTENTION
Install the outside pipes of the heating circuit beneath the frost line.

Proceed as follows:

1. Check seals of all hydraulic connections. Conduct pressure test...
2. Insulate all connections and lines of the heat circuit and the heat source.

Commissioning

DANGER!
Prior to commissioning the unit, the air flow baffles must be mounted and the facing panels closed.

Proceed as follows:

1. Conduct a thorough installation inspection and go through the items on the general checklist.

"General checklist".

The installation inspection will prevent damage to the heat pump system that could be caused by incorrect installation work.

Make sure of the following…

- **Clockwise rotary field** of the load power supply (compressor).
- **Installation and assembly** of the heat pump according to the information in this operating manual.

- All electric installation work must be properly completed.
- A **3-pole automatic circuit-breaker** must be installed for the compressor. It must have a contact gap of at least 3 mm.
- The heating circuit must be rinsed, filled and thoroughly bled.
- All valves and shut-off devices of the heating circuit must be open.
- All pipe systems and components of the system must be sealed.

② The heat pump system will be commissioned by customer service personnel authorized by the manufacturer. There is a fee for commissioning!

SAFETY TEMPERATURE LIMITER

A safety temperature limiter is built into the electric heating element (depending on model). In the event of a malfunction in the heat pump or air in the system, check whether the reset button of the safety temperature limiter has tripped. If this is the case, push in the button.

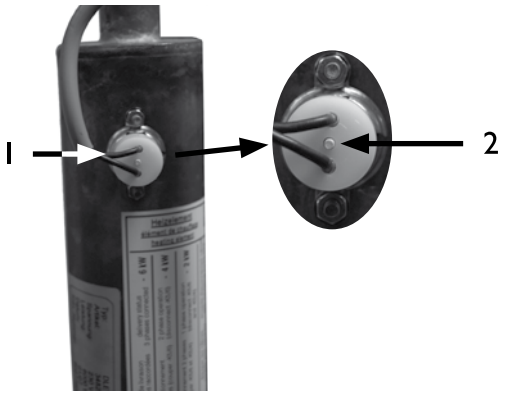

1 Safety temperature button on electric heating element
2 Reset button

Dismantling

DANGER!
Danger of fatal injury due to electric current!
Electrical connections may be installed only by qualified electricians.

Before opening the unit, disconnect the system from the power supply and secure it from being switched back on!

WARNING!
Only qualified heating or cooling system technicians are allowed to remove the unit from the system.

ATTENTION
Recycle or provide for proper disposal of unit components, refrigerants and oil in accordance with the applicable regulations, standards and directives.

REMOVAL OF THE BUFFER BATTERY

ATTENTION
Before scrapping the heating and heat pump regulator, remove the buffer battery on the processor board. The battery can be pushed out using a screwdriver. Dispose of battery and electronic components in keeping with environmental considerations.

Technical data / scope of delivery

Heat pump type	Brine/water ı Air/water ı Water/water			• applicable ı — not applicable
Installation location	Indoors ı Outdoors			• applicable ı — not applicable
Conformity				CE
Performance data	Heating capacity/COP at			
	A7/W35	Standard point acc. to EN14511	2 Compressors 1 Compressor	kW ı ... kW ı ...
	A7/W45	Standard point acc. to EN14511	2 Compressors 1 Compressor	kW ı ... kW ı ...
	A2/W35	Operating point according to EN14511	2 Compressors 1 Compressor	kW ı ... kW ı ...
	A10/W35	Operating point according to EN14511	2 Compressors 1 Compressor	kW ı ... kW ı ...
	A-7/W35	Operating point according to EN14511	2 Compressors 1 Compressor	kW ı ... kW ı ...
	A-15/W65		2 Compressors 1 Compressor	kW ı ... kW ı ...
Limits of application	Heating circuit			°C
	Heat source			°C
	Additional operating points			°C
Sound	Internal sound pressure level (open air test field, distance of 1m around the engine, average)			dB(A)
	External sound pressure level (open air test field, distance of 1m around the air supplies, average) (2x 1m original straight air duct)			dB(A)
	Sound power inside			dB(A)
	Sound power outside			dB(A)
Heat source	Air volume flow at maximum external compression			m³/h
	Maximum external pressure			Pa
Heating circuit	Volume flow: minimum flow rate ı nominal flow rate A7/W35 EN14511 ı maximum flow rate			l/h
	Pressure loss heat pump Δp ı volume flow			bar ı l/h
	Free compression heat pump Δp ı volume flow			bar ı l/h
	Content of buffer tank			l
	3-way valve, heating/hot water			...
General unit data	Dimensions (see dimensional drawing for the specified unit size)			unit size
	Total weight			kg
	Connections	Heating circuit		...
		Heat source		...
	Refrigerant	Refrigerant type ı Quantity		... ı kg
	Free cross section, air channels			mm
	Cross section, condensate water / length from unit			mm ı m
Electric	Voltage code ı all-pole circuit breaker heat pump **)			... ı A
	Voltage code ı circuit breaker control voltage **)			... ı A
	Voltage code ı circuit breaker electric heating element **)			ı A
Heat Pump	Effective power consumption in standard point A7/W35 according to EN14511: Power consumption ı current consumption ı cosφ			kW ı A ı ...
	Maximum device current within the limits of application			A
	Starting current: direct ı with soft starter			A ı A
	Protection type			IP
	Output electric heating element 3 ı 2 ı 1 phase			kW ı kW ı kW
Components	Circulating pump heating circuit at nominal flow rate: Power consumption ı current consumption			kW ı A
Safety equipment	Safety component heating circuit ı Safety component heat source			Includ. in sc. of del.: • yes — no
Heating and heat pump regulator				Includ. in scope of delivery: • yes — no
Control and sensor wire				Includ. in scope of delivery: • yes — no
Power cable to unit				Includ. in scope of delivery: • yes — no
Electronic soft starter				integrated: • yes — no
Expansion vessels	Heat source: Scope of delivery ı Volume ı Initial pressure			• yes — no ı l ı bar
Overflow valve				integrated: • yes — no
Vibration decouplers	Heating circuit ı heat source			Included in scope of delivery: • yes — no

UK813517

*) depending on components tolerances and flow **) comply with local regulations n.n. = not detectable w.w. = to choice
¹) hot water return ²) hot water flow

	AP-AW30-25E	AP_AW30-31E
	— ı • ı —	— ı • ı —
	— ı •	— ı •
	•	•
	27,3 ı 3,9 14,1 ı 4,2	35,0 ı 4,0 19,1 ı 4,2
	26,1 ı 3,3 13,7 ı 3,4	34,4 ı 3,5 18,9 ı 3,6
	24,0 ı 3,6 13,2 ı 3,8	31,0 ı 3,5 16,8 ı 3,6
	29,2 ı 4,0 14,2 ı 4,5	37,0 ı 4,1 20,2 ı 4,3
	19,4 ı 2,8 10,1 ı 2,9	25,0 ı 2,8 13,2 ı 2,9
	— —	— —
	20[1] – 50[2]	20 – 58 (60)*)
	-20 – 35	-20 – 35
	A> -7 / 60[2]	—
	—	—
	57	59
	—	—
	65	67
	7800	7800
	—	—
	2500 ı 5000 ı 6200	4000 ı 6000 ı 10000
	0,12 ı 5000	0,04 ı 6000
	— ı —	— ı —
	—	—
	—	—
	5	6
	540	573
	R5/4"AG	R6/4"AG
	—	—
	R407C ı 9,8	R404A ı 13,0
	—	—
	30 ı 1	30 ı 1
	3~/N/PE/400V/50Hz ı C25	3~/PE/400V/50Hz ı C32
	1~/N/PE/230V/50Hz ı B10	1~/N/PE/230V/50Hz ı B10
	3~/N/PE/400V/50Hz ı B16	— ı —
	7,0 (3,4) ı 14,4 (7,0) ı 0,7 (0,7)	8,75 (4,5) ı 16,8 (8,7) ı 0,75 (0,75)
	24,5	28
	74 ı 30	80 ı 38
	24	24
	9 ı 6 ı 3	— ı — ı —
	— ı —	— ı —
	— ı —	— ı —
	—	—
	—	—
	—	—
	•	•
	— ı — ı —	— ı — ı —
	—	—
	—	—
	813516d	813507d

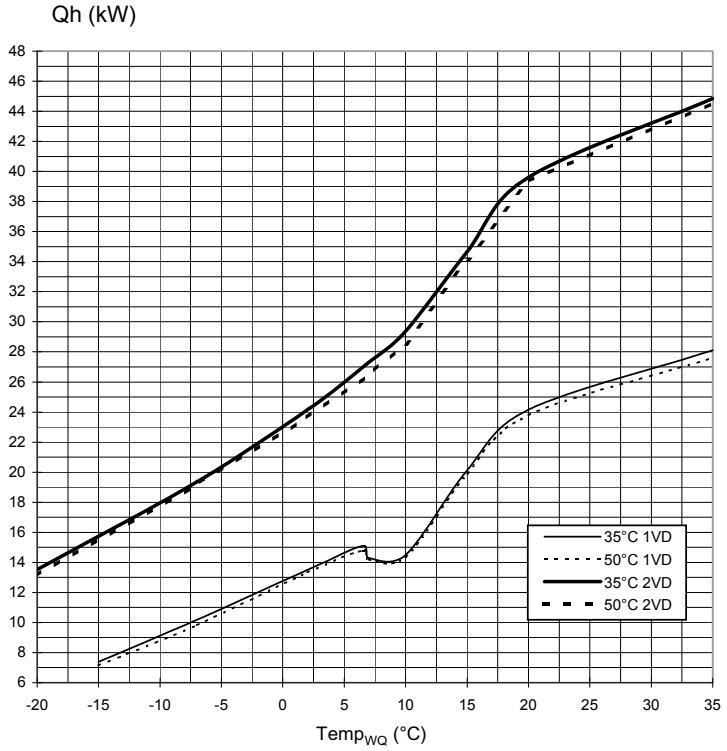

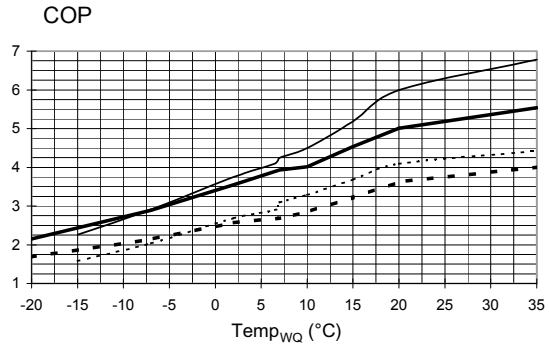

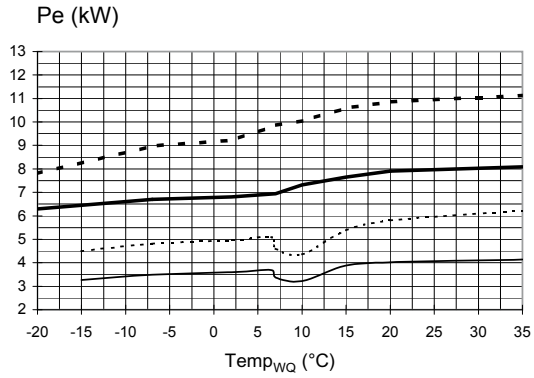

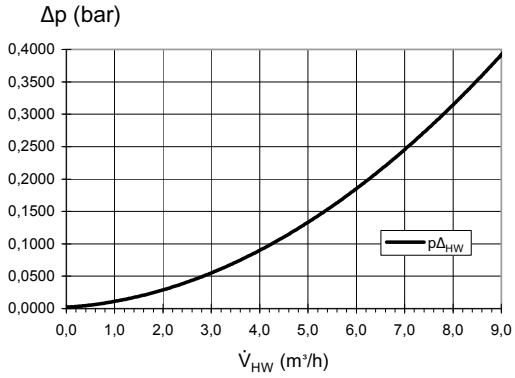

823156a

Legend:	UK823129L/170408
$\dot{V}_{HW}$	Volume flow, heating water
Temp$_{WQ}$	Temperature, heat source
Qh	Heating capacity
Pe	Power consumption
COP	Coefficient of performance / efficiency rating
Δp_{HW}	Pressure loss heat pump
VD	Compressor(s)

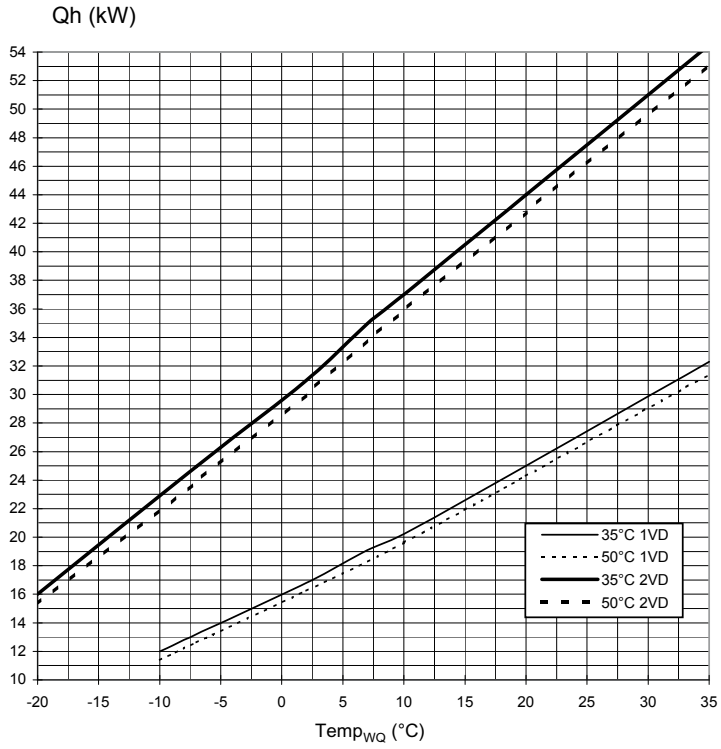

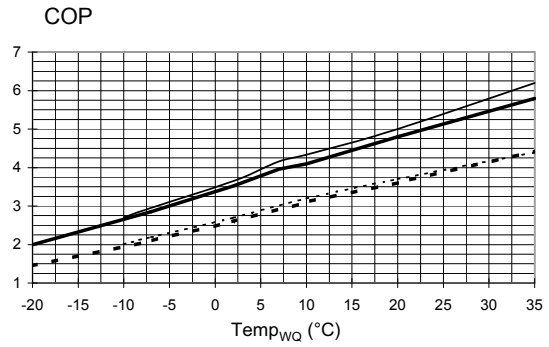

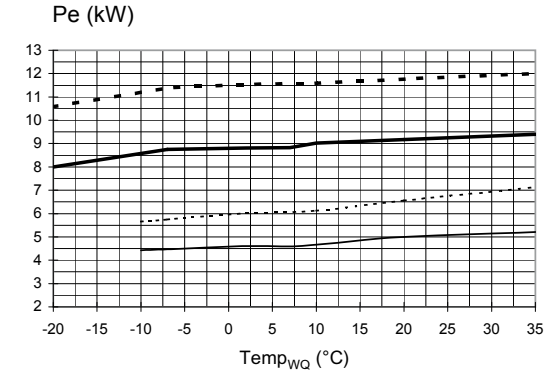

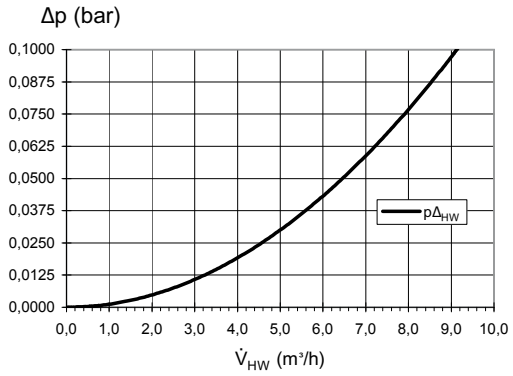

823147a

Legend:	UK823129L/170408
$\dot{V}_{HW}$	Volume flow, heating water
Temp$_{WQ}$	Temperature, heat source
Qh	Heating capacity
Pe	Power consumption
COP	Coefficient of performance / efficiency rating
Δp_{HW}	Pressure loss heat pump
VD	Compressor(s)

Sound pressure level

(in free field)

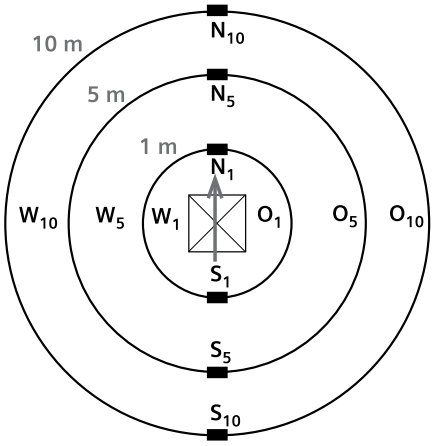

	N1 dB (A)	O1 dB (A)	S1 dB (A)	W1 dB (A)	N5 dB (A)	O5 dB (A)	S5 dB (A)	W5 dB (A)	N10 dB (A)	O10 dB (A)	S10 dB (A)	W10 dB (A)
AP-AW30-25E	59	57	56	57	45	43	42	43	39	37	36	37
AP-AW30-31E	61	58	59	59	47	44	45	45	41	38	39	39

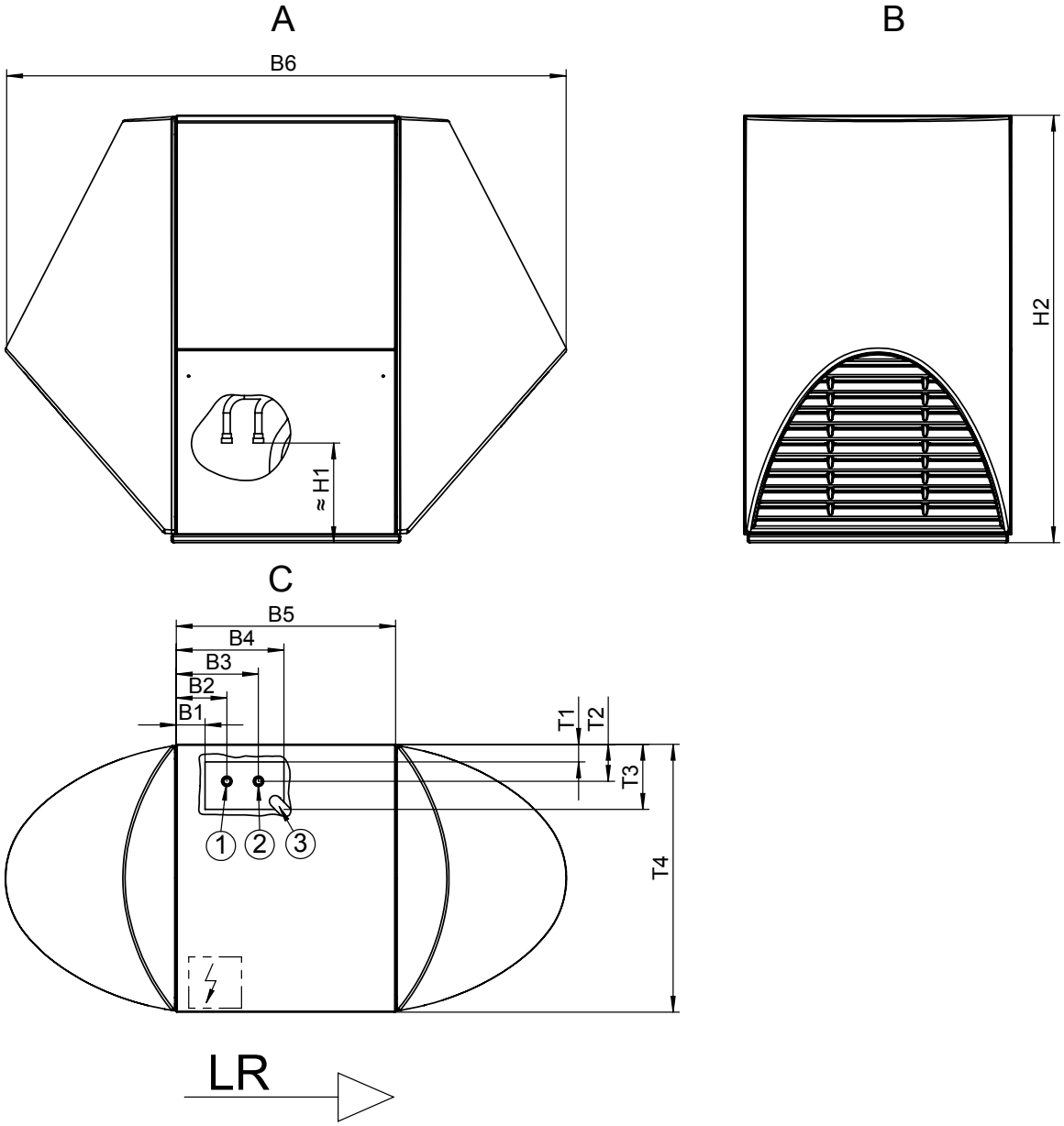

Legende: UK819351b
All dimensions in mm

A	Front view
B	Side view
C	Top view
1	Heating water outflow (forward flow)
2	Heating water inflow (return flow)
3	Condensate hose diameter 36
LR	Air direction

	B1	B2	B3	B4	B5	B6	T1	T2	T3	T4	H1	H2	1	2
AP-AW30-25E	72	142	242	372	715	1779	168	283	398	1258	460	1817	R 1 1/4"	R 1 1/4"

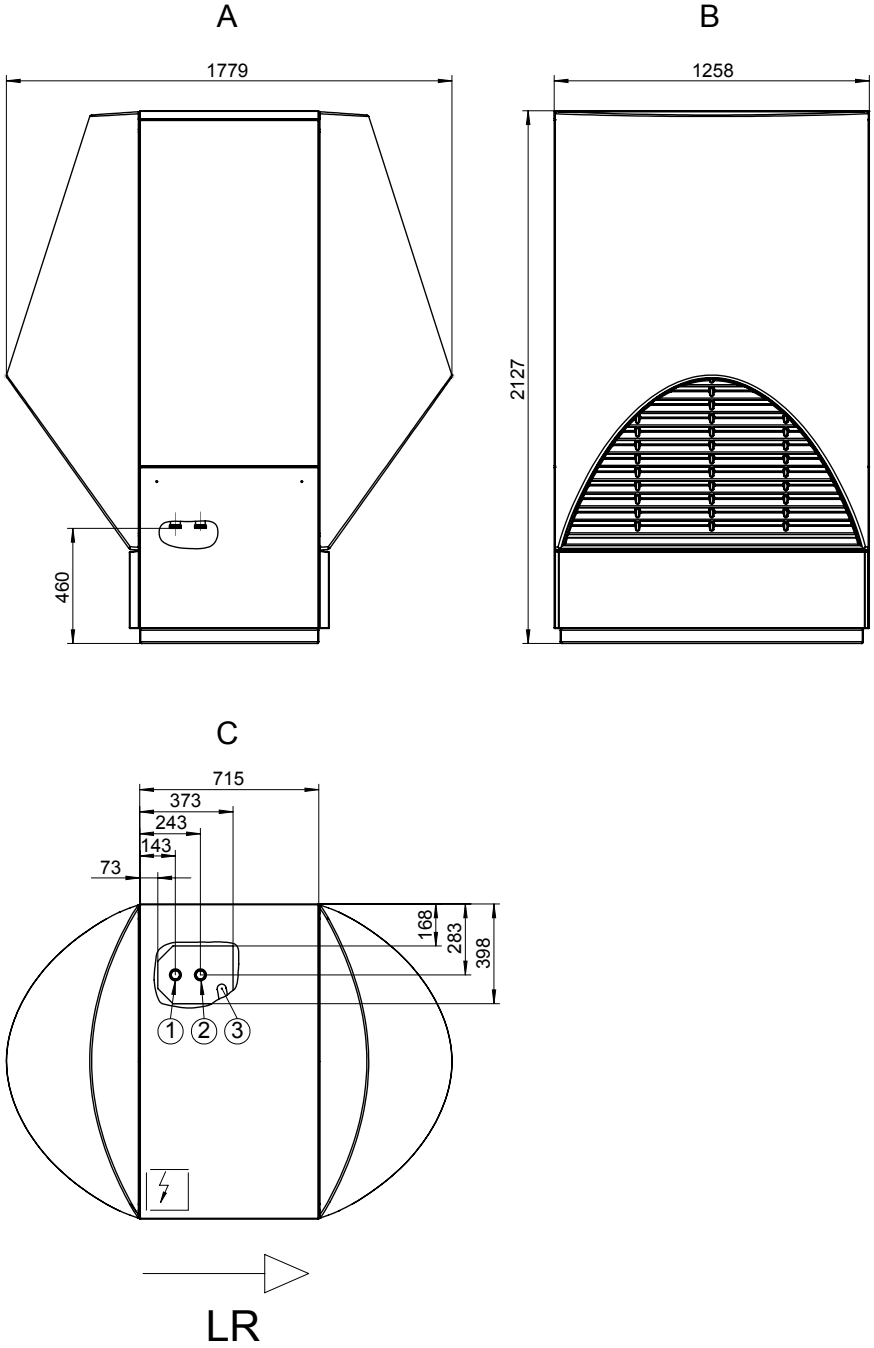

Legend: UK819326
All dimensions in mm.

A	Front view
B	Side view
C	Top view
1	Heating water outflow (forward flow)
2	Heating water inflow (return flow)
3	Condensate hose diameter 36
LR	Air direction

A

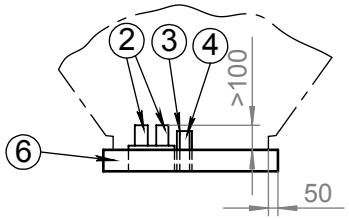

C

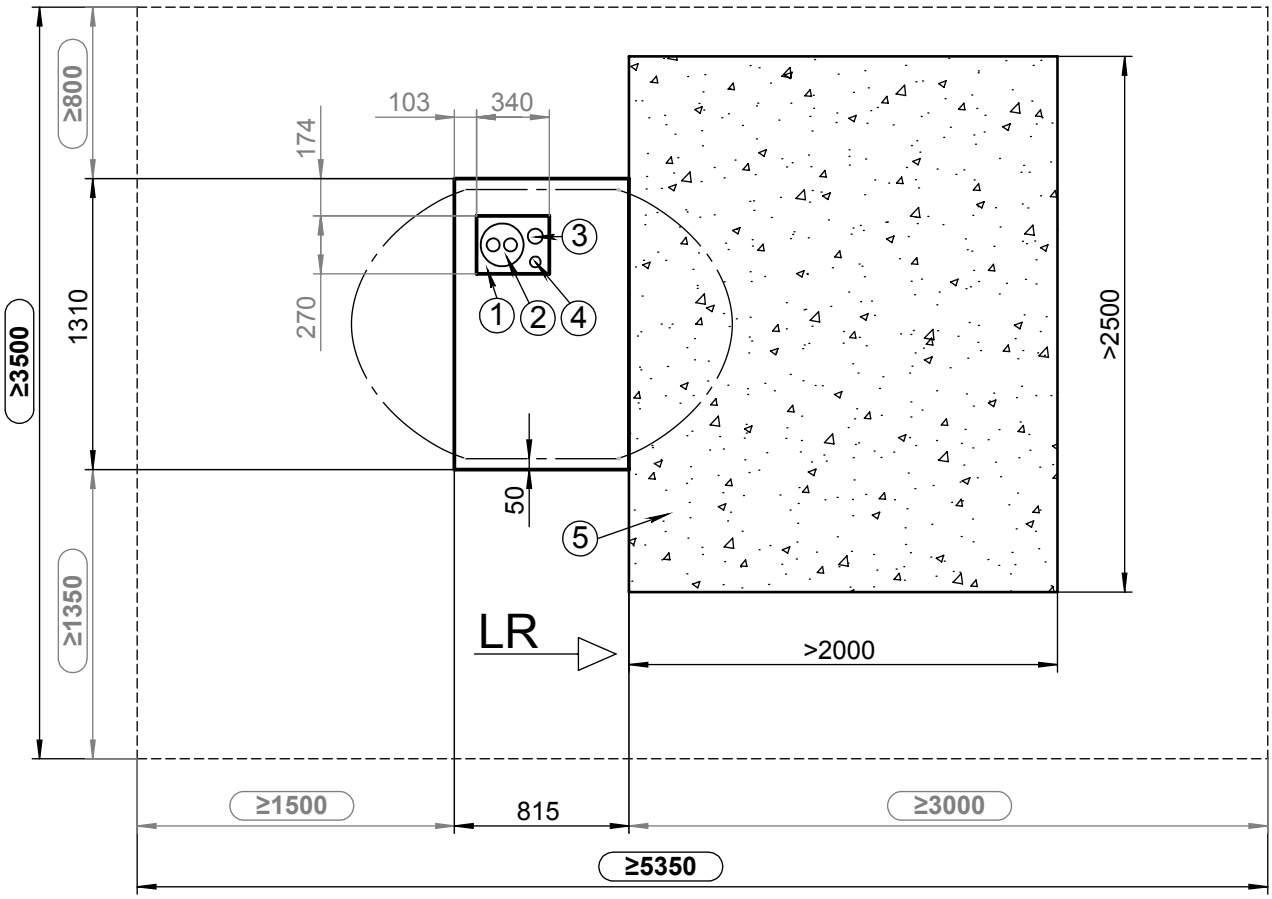

Legend: UK819378
All dimensions in mm.

A	Front view
C	Top view
≥ …	Minimum clearances
1	Recess in base
2	Local heat pipe for heating water forward/return flow
3	Empty pipe for electric cables, minimum diameter 70mm
4	Condensate discharge, minimum diameter 50mm
5	Water-permeable surface (gravel, …) in the air outlet area
6	Base
LR	Air direction

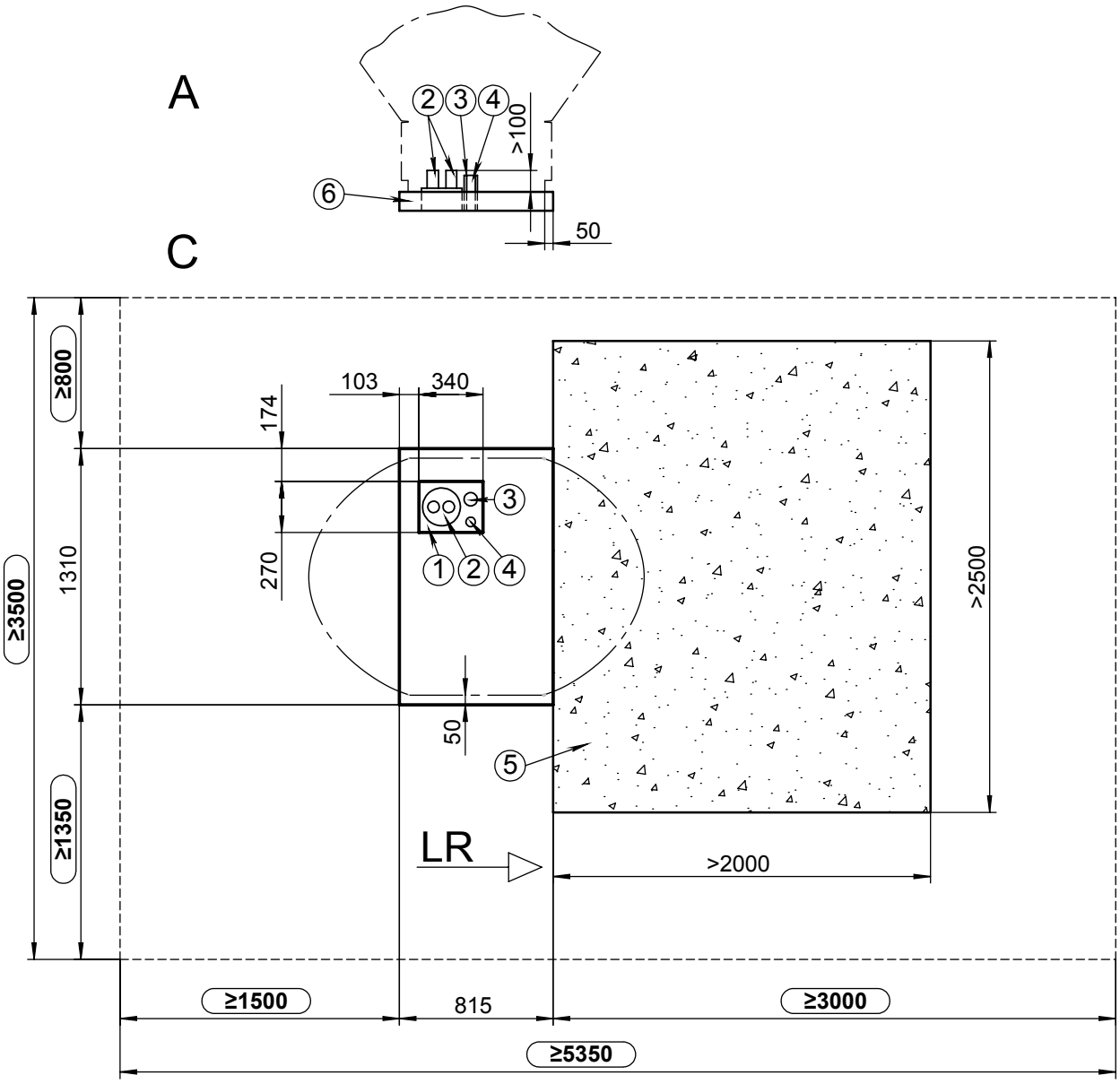

Legend: UK819327
All dimensions in mm.

A	Front view
C	Top view
≥ …	Minimum clearances
1	Recess in base
2	Local heat pipe for heating water forward/return flow
3	Empty pipe for electric cables, minimum diameter 70mm
4	Condensate discharge, minimum diameter 50mm
5	Water-permeable surface (gravel, …) in the air outlet area
6	Base
LR	Air direction

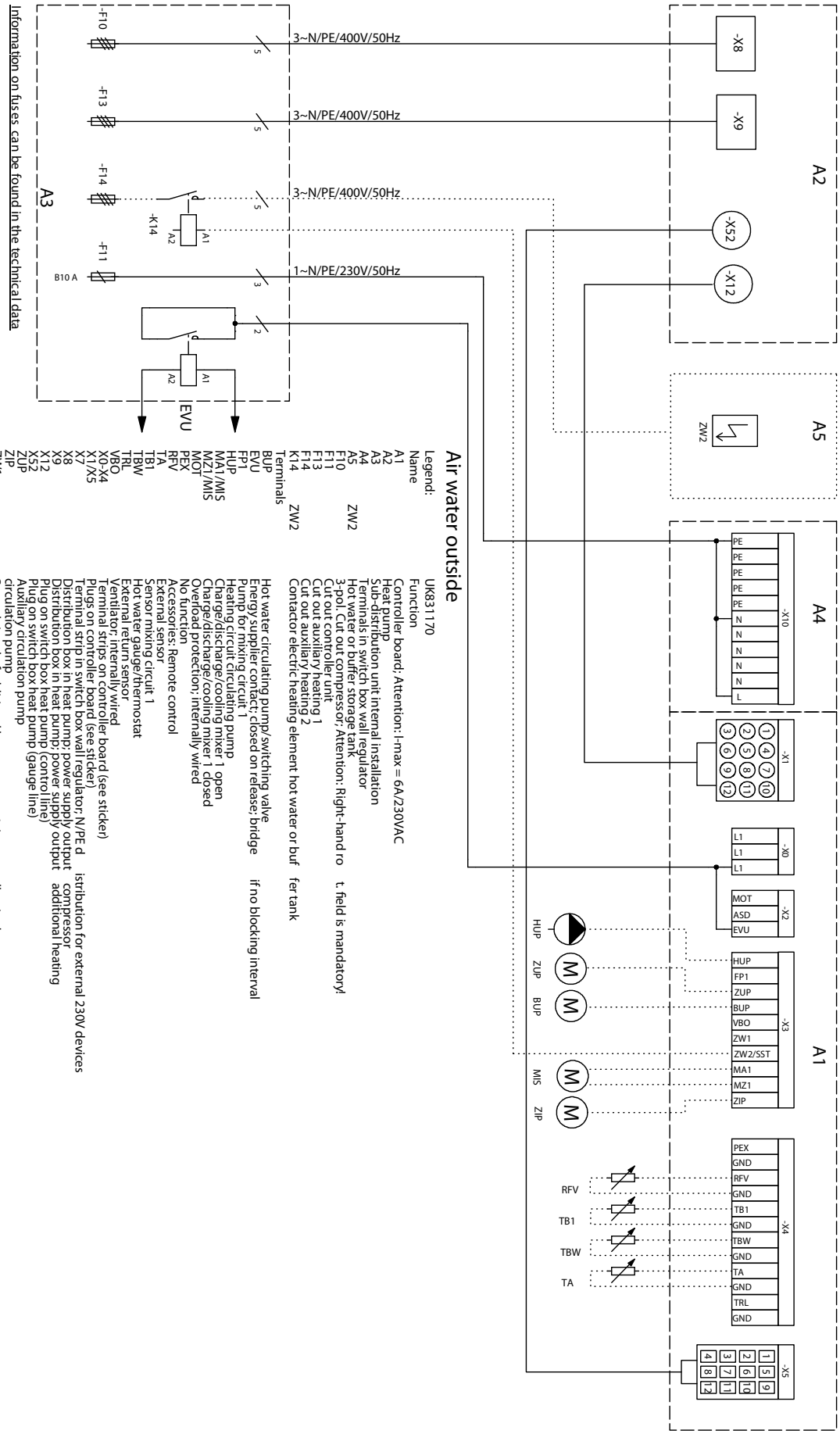
A2
-X8
-X9
-X52
-X12
A5
ZW2
A4
-X10
PE
N
L
-X1
-X0
L1
-X2
MOT
ASD
EVU
A1
-X3
HUP
FP1
ZUP
BUP
VBO
ZW1
ZW2/SST
MA1
MZ1
ZIP
-X4
PEX
GND
RFV
TB1
TBW
TA
TRL
-X5
HUP
ZUP
BUP
MIS
ZIP
RFV
TB1
TBW
TA
A3
-F10
-F13
-F14
-F11
-K14
B10 A
3~N/PE/400V/50Hz
3~N/PE/400V/50Hz
3~N/PE/400V/50Hz
1~N/PE/230V/50Hz
EVU
Information on fuses can be found in the technical data
Air water outside
Legend:
Name
Function
A1 Controller board; Attention: I-max = 6A/230VAC
A2 Heat pump
A3 Sub-distribution unit internal installation
A4 Terminals in switch box wall regulator
A5 Hot water or buffer storage tank
F10 3-pol. Cut out compressor; Attention: Right-hand ro t. field is mandatory!
F11 Cut out controller unit
F13 Cut out auxiliary heating 1
F14 Cut out auxiliary heating 2
K14 Contactor electric heating element hot water or buf fer tank
Terminals
BUP Hot water circulating pump/switching valve
EVU Energy supplier contact; closed on release; bridge if no blocking interval
FP1 Pump for mixing circuit 1
HUP Heating circuit circulating pump
MA1/MIS Charge/discharge/cooling mixer 1 open
MZ1/MIS Charge/discharge/cooling mixer 1 closed
MOT Overload protection; internally wired
PEX No function
RFV Accessories: Remote control
TA External sensor
TB1 Sensor mixing circuit 1
TBW Hot water gauge/thermostat
TRL External return sensor
VBO Ventilator; internally wired
X0-X4 Terminal strips on controller board (see sticker)
X1/X5 Plugs on controller board (see sticker)
X7 Terminal strip in switch box wall regulator; N/PE d istribution for external 230V devices
X8 Distribution box in heat pump; power supply output compressor
X9 Distribution box in heat pump; power supply output additional heating
X12 Plug on switch box heat pump (control line)
X52 Plug on switch box heat pump (gauge line)
ZUP Auxiliary circulation pump
ZIP circulation pump
ZW1 Control signal of additional heat generator 1; inte mally wired
ZW2/SST Control signal of additional heat generator 2

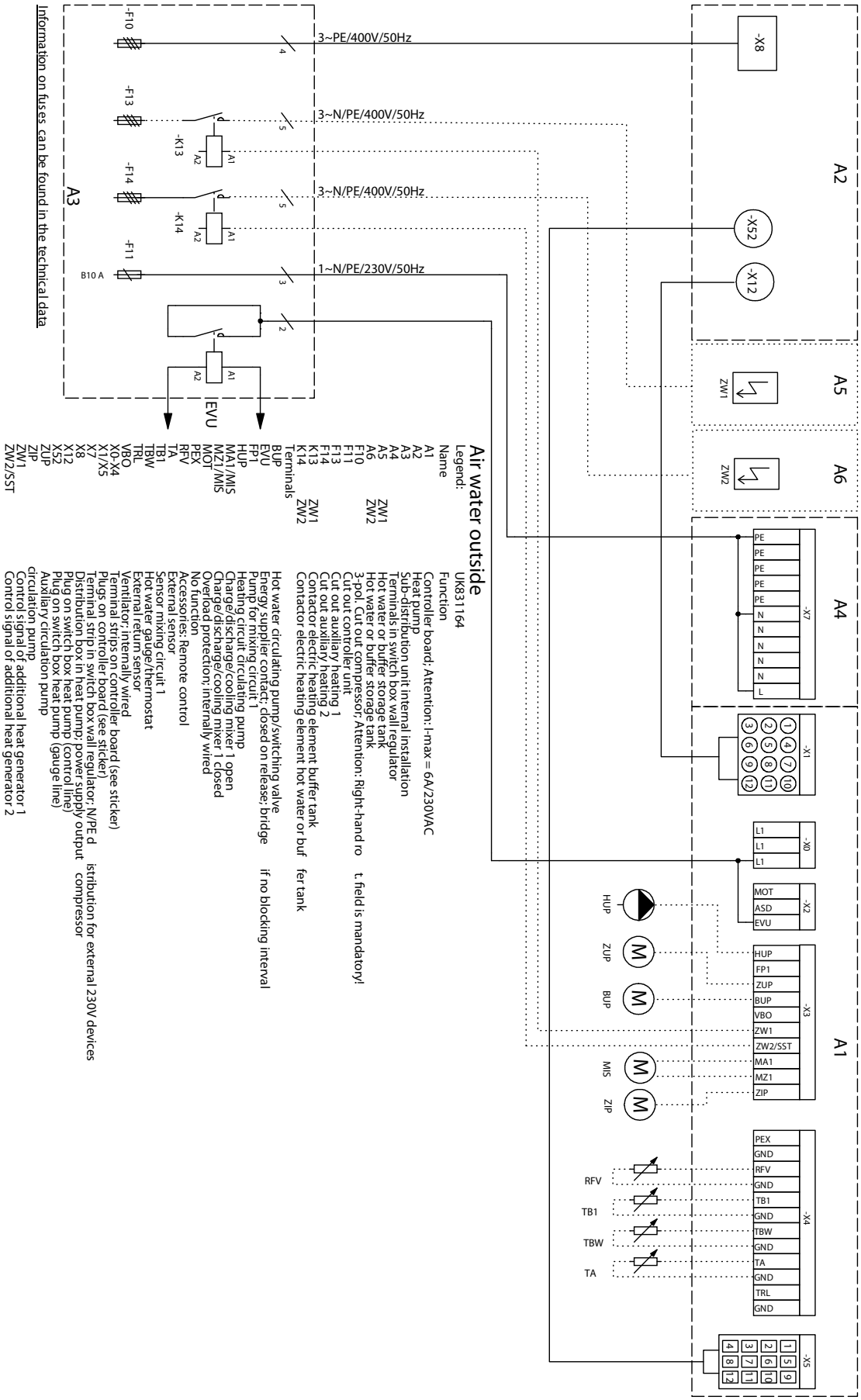
A2
-X8
-X52
-X12
A5
ZW1
A6
ZW2
A4
-X7
PE
PE
PE
PE
PE
N
N
N
N
N
L
-X1
1 2 3 4 5 6 7 8 9 10 11 12
-X0
L1
L1
L1
-X2
MOT
ASD
EVU
-X3
HUP
FP1
ZUP
BUP
VBO
ZW1
ZW2/SST
MA1
MZ1
ZIP
A1
HUP
ZUP
BUP
MIS
ZIP
-X4
PEX
GND
RFV
GND
TB1
GND
TBW
GND
TA
GND
TRL
GND
RFV
TB1
TBW
TA
-X5
1 2 3 4 5 6 7 8 9 10 11 12
3~PE/400V/50Hz
3~N/PE/400V/50Hz
3~N/PE/400V/50Hz
1~N/PE/230V/50Hz
A3
-F10
-F13
-F14
-F11
B10 A
-K13
-K14
A1
A2
EVU
Information on fuses can be found in the technical data
Air water outside
Legend:
UK831164
Name Function
A1 Controller board; Attention: I-max = 6A/230VAC
A2 Heat pump
A3 Sub-distribution unit internal installation
A4 Terminals in switch box wall regulator
A5 Hot water or buffer storage tank
A6 Hot water or buffer storage tank
F10 3-pol. Cut out compressor,Attention: Right-hand ro t. field is mandatory!
F11 Cut out controller unit
F13 Cut out auxiliary heating 1
F14 Cut out auxiliary heating 2
K13 ZW1 Contactor electric heating element buffer tank
K14 ZW2 Contactor electric heating element hot water or buf fer tank
Terminals
BUP Hot water circulating pump/switching valve
EVU Energy supplier contact; closed on release; bridge if no blocking interval
FP1 Pump for mixing circuit 1
HUP Heating circuit circulating pump
MA1/MIS Charge/discharge/cooling mixer 1 open
MZ1/MIS Charge/discharge/cooling mixer 1 closed
MOT Overload protection; internally wired
PEX No function
RFV Accessories; Remote control
TA External sensor
TB1 Sensor mixing circuit 1
TBW Hot water gauge/thermostat
TRL External return sensor
VBO Ventilator; internally wired
X0-X4 Terminal strips on controller board (see sticker)
X1/X5 Plugs on controller board (see sticker)
X7 Terminal strip in switch box wall regulator; N/PE d istribution for external 230V devices
X8 Distribution box in heat pump; power supply output compressor
X12 Plug on switch box heat pump (control line)
X52 Plug on switch box heat pump (gauge line)
ZUP Auxiliary circulation pump
ZIP circulation pump
ZW1 Control signal of additional heat generator 1
ZW2/SST Control signal of additional heat generator 2

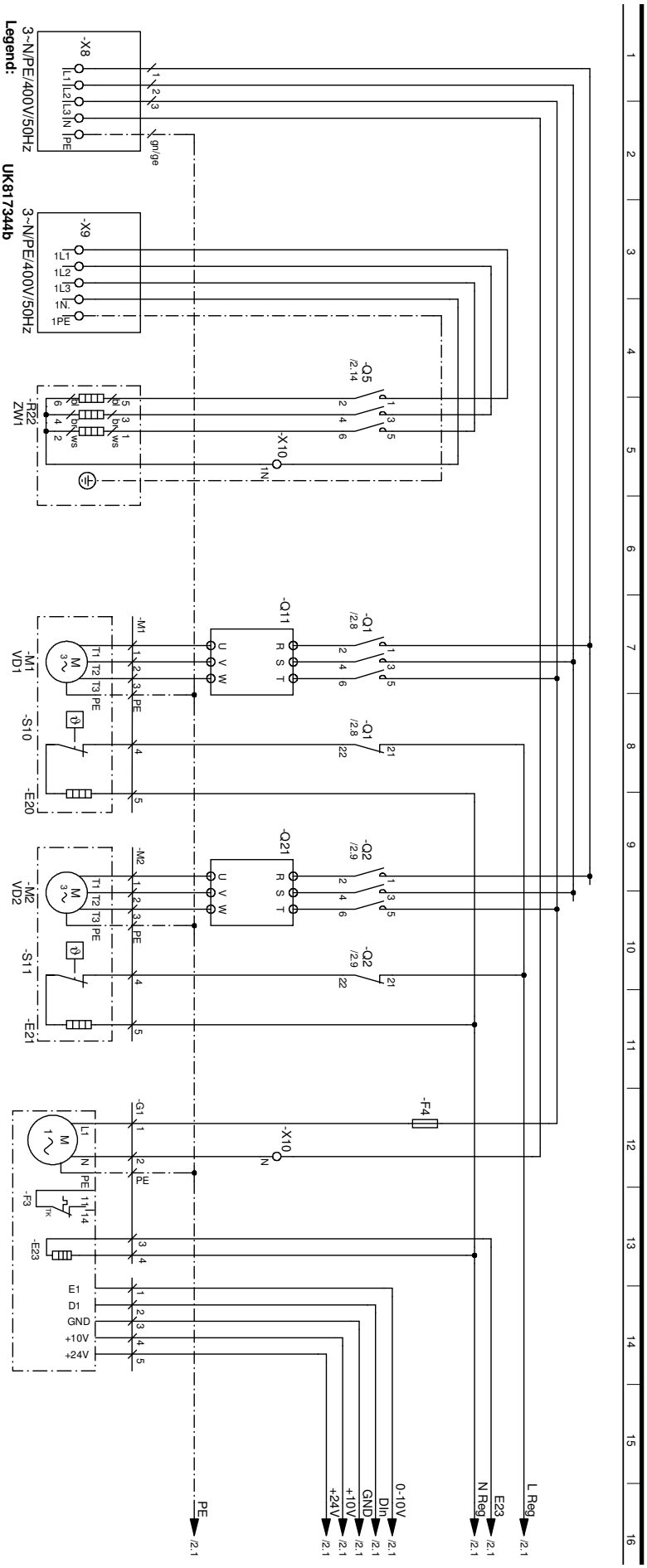

Legend:

UK817344b

Operating materials		
3~N/PE/400V/50Hz		
3~N/PE/400V/50Hz		
E20		
E21		
E22		
E23		
F3		
F4		
G1		
M1		
M2		
Q1		
Q2		
Q5		
Q11		
Q21		
S10		
S11		
X8		
X9		
X10		

Function		
Power supply compressor; right-hand rot. field is mandatory!		
Power supply aux. heating		
Sump heating for compressor 1		
Sump heating for compressor 2		
Auxiliary heating		
Nozzle heating fan		
Motor protection fan		
Fan fuse 6.3 A		
Fan	VENT1	
Compressor 1	VD1	
Compressor 2	VD2	
Contactor for compressor 1	VD1	
Contactor for compressor 2	VD2	
Contactor for auxiliary heating	ZW1	
Starting current limit compressor 1		
Starting current limit compressor 2		
Thermostat Sump heating for compressor 1		
Thermostat Sump heating for compressor 2		
Distribution box power supply output compressor		
Distribution box power supply additional heating		
Terminal in switch box heat pump		

Circuit diagram 2/3

AP-AW30-25E

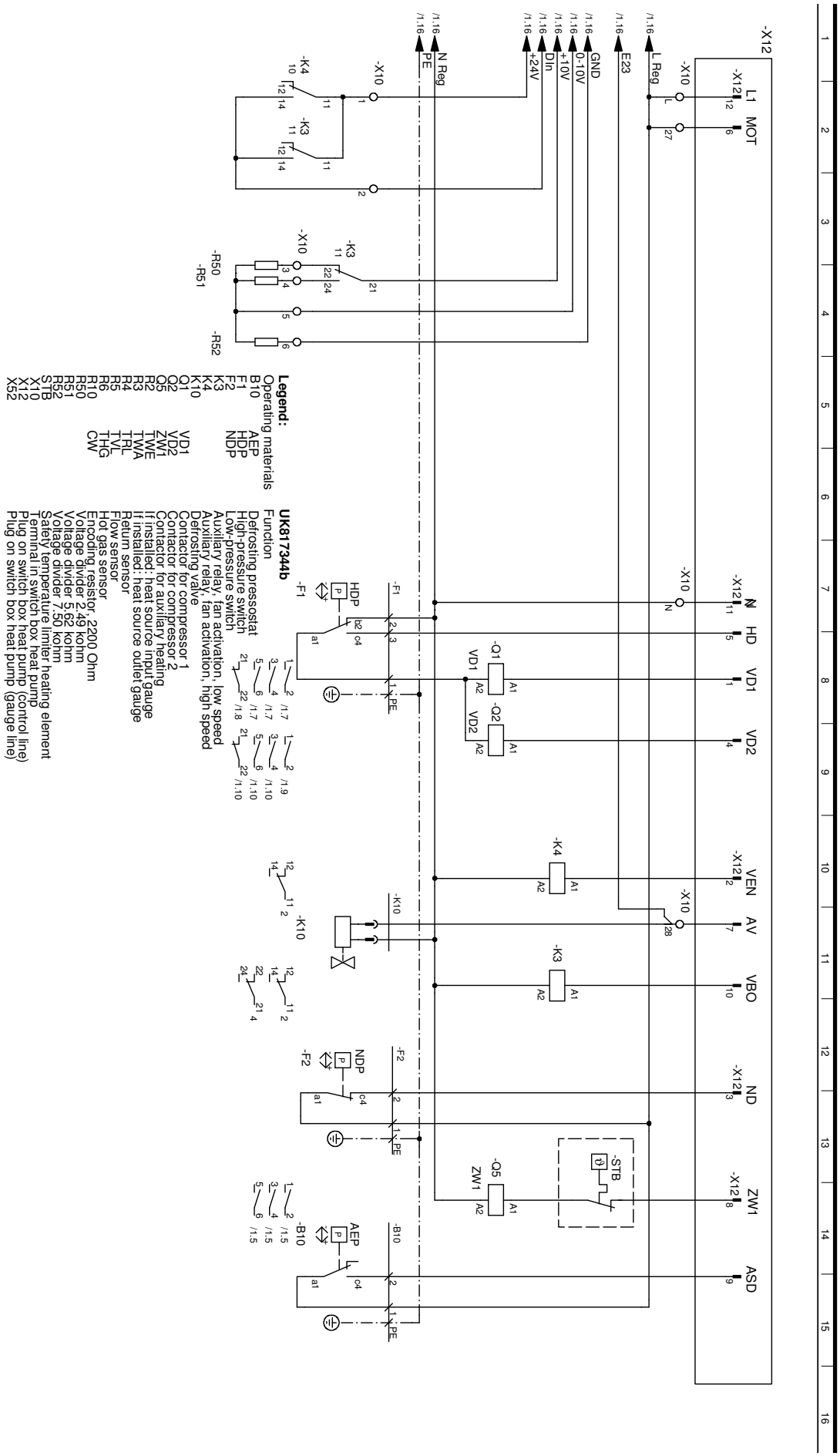

Circuit diagram 3/3

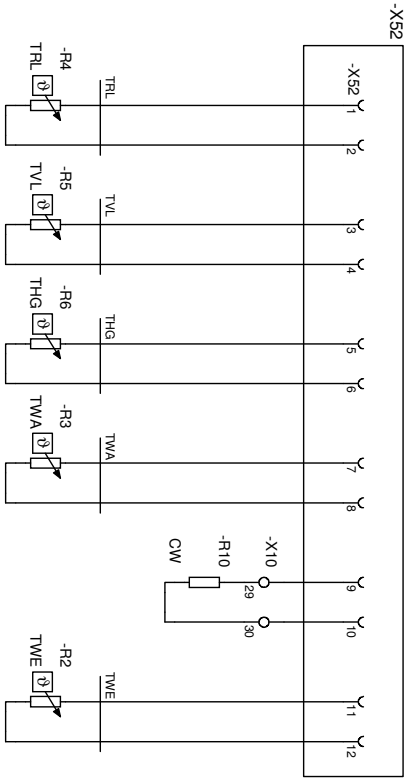

Legend:

Operating materials	
B10	AEP
F1	NDP
F2	NDP
K10	
Q1	VD1
Q2	VD2
Q3	
Q4	
Q5	ZW1
Q6	TWE
R2	TWA
R3	TRL
R4	TVL
R5	THG
R6	CW
R10	
STB	
X10	
X12	
X52	

UK817344b

Function
Defrosting pressostat
High-pressure switch
Low-pressure switch
Defrosting valve
Contactor for compressor 1
Contactor for compressor 2
Network protection fan
Triangle contactor fan
Star contactor fan
Contactor for auxiliary heating
If installed: heat source input gauge
If installed: heat source outlet gauge
Return sensor
Flow sensor
Hot gas sensor
Encoding resistor, 2200 Ohm
Safety temperature limiter heating element
Terminal in switch box heat pump
Plug on switch box heat pump (control line)
Plug on switch box heat pump (gauge line)

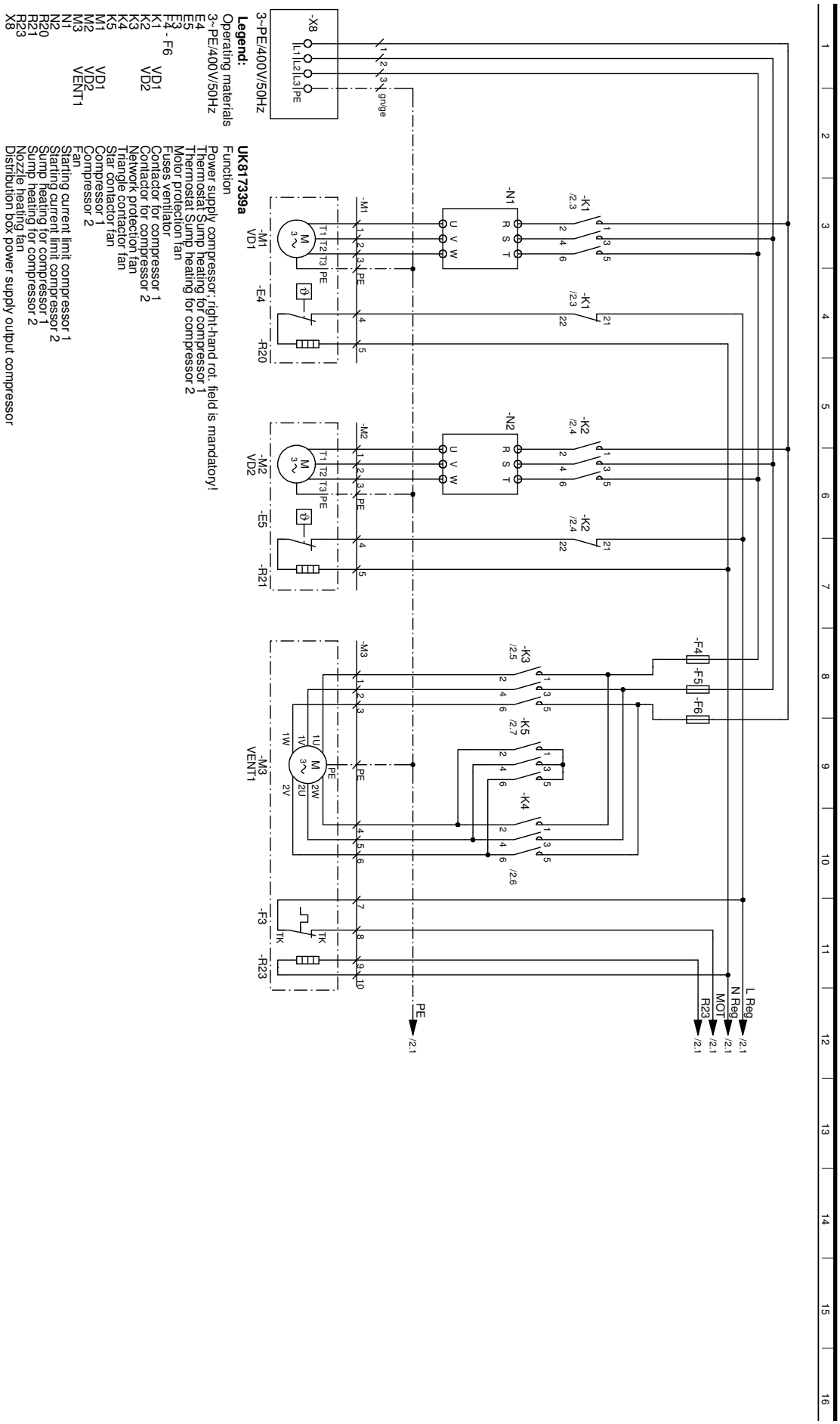

Legend:

Operating materials	
3~PE/400V/50Hz	
E4	Operating compressor; right-hand rot. field is mandatory!
E5	Thermostat Sump heating for compressor 1
F3	Thermostat Sump heating for compressor 2
F4 - F6	Motor protection fan
K1	Fuses ventilator
K2	Contactor for compressor 1
K3	Contactor for compressor 2
K4	Network protection fan
K5	Triangle contactor fan
M1	Star contactor fan
M2	Compressor 1
M3	Compressor 2
N1	Fan
N2	Starting current limit compressor 1
R20	Starting current limit compressor 2
R21	Sump heating for compressor 1
R23	Sump heating for compressor 2
X8	Nozzle heating fan
	Distribution box power supply output compressor

UK817339a

Function	
VD1	
VD2	
VENT1	

Circuit diagram 2/2

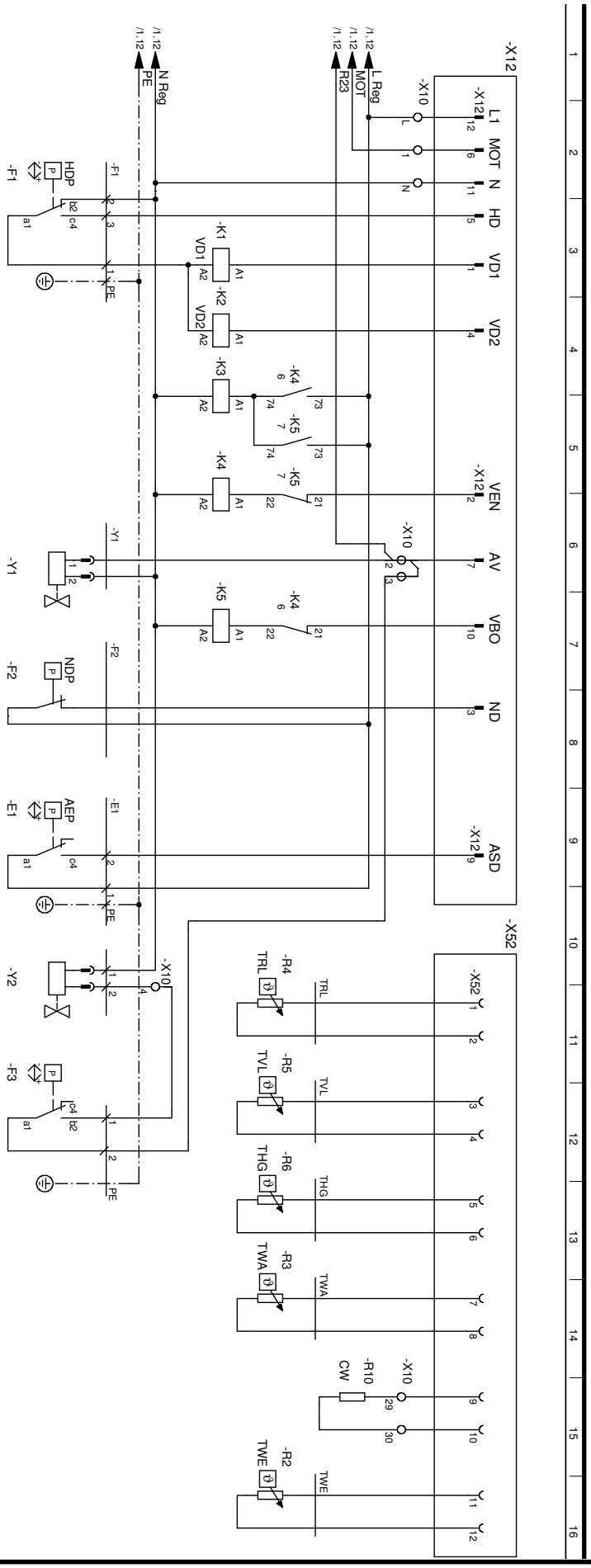

Legend:

Operating materials

E1	AEP
E1	HDP
F2	NDP
F3	
K1	VD1
K2	VD2
K3	
K4	
K5	
R2	TWE
R3	TWA
R4	TRL
R5	TVL
R6	THG
R10	CW
X10	
X12	
X52	
Y1	
Y2	

UK817339a

	Function
F1	Defrosting pressostat
	High-pressure switch
	Low-pressure switch
	Low-pressure switch
K1	Contactor for compressor 1
K2	Contactor for compressor 2
K3	Network protection fan
K4	Triangle contactor fan
K5	Star contactor fan
R2	If installed: heat source input gauge
R3	If installed: heat source outlet gauge
R4	Return sensor
R5	Flow sensor
R6	Hot gas sensor
R10	Encoding resistor, 4220 Ohm
X10	Terminal in switch box heat pump
X12	Plug on switch box heat pump (control line)
X52	Plug on switch box heat pump (gauge line)
Y1	Defrosting valve
Y2	Bypass compressor

EC Declaration of Conformity in accordance with the EC Machinery Directive 2006/42/EC, Annex IIA

The undersigned
confirms that the following designated device(s) as designed and marketed by us fulfill the standardized EC directives, the EC safety standards and the product-specific EC standards.
In the event of modification of the device(s) without our approval, this declaration shall become invalid.

Designation of the device(s)

Heat Pump

Unit model	Number	Unit model	Number
AP-BW30-37*	065285 (106614 02)	AP-AW10-6C	064118 (106440 46)
AP-BW30-45*	065286 (106615 02)	AP-AW10-8C	064119 (106441 46)
AP-BW30-58*	065288 (106616 02)	AP-AW10-10C	064120 (106442 46)
AP-BW30-69*	065289 (106617 02)	AP-AW10-12C	064121 (106443 46)
AP-BW30-29H*	065284 (106618 02)	AP-AW30-25E	064116 (106546 02)
AP-BW30-56H*	065287 (106621 02)	AP-AW30-31E*	064117 (106547 02)
AP-BW30-110*	065290 (106372 04)		
AP-BW30-125*	065291 (106373 04)		
AP-BW30-160*	065292 (106374 04)		
AP-BW30-85H*	065296 (106376 04)		

EC Directives
2006/42/EG
2006/95/EG
2004/108/EG
97/23/EG
2011/65/EG
*** Pressure equipment component**
Category II
Module A1
Designated position:
TÜV-SÜD
Industrie Service GmbH (Nr.:0036)

Standardized EN

EN 378	EN 349
EN 60529	EN 60335-1/-2-40
EN ISO 12100-1/2	EN 55014-1/-2
EN ISO 13857	EN 61000-3-2/-3-3

Company:

Place, date: Markaryd 2013-08-15

Signature:

Kenneth Magnusson Quality and Environmental Manager

Signature:

Peter Jocic Business Area Product Manager

AT KNV Energietechnik GmbH, Gahberggasse 11, 4861 Schörfling
Tel: +43 (0)7662 8963-0 Fax: +43 (0)7662 8963-44 E-mail: mail@knv.at www.knv.at

CH NIBE Wärmetechnik AG, Winterthurerstrasse 710, CH-8247 Flurlingen
Tel: (52) 647 00 30 Fax: (52) 647 00 31 E-mail: info@nibe.ch www.nibe.ch

CZ Druzstevni zavody Drazice s.r.o, Drazice 69, CZ - 294 71 Benatky nad Jizerou
Tel: +420 326 373 801 Fax: +420 326 373 803 E-mail: nibe@nibe.cz www.nibe.cz

DE NIBE Systemtechnik GmbH, Am Reiherpfahl 3, 29223 Celle
Tel: 05141/7546-0 Fax: 05141/7546-99 E-mail: info@nibe.de www.nibe.de

DK Vølund Varmeteknik A/S, Member of the Nibe Group, Brogårdsvej 7, 6920 Videbæk
Tel: 97 17 20 33 Fax: 97 17 29 33 E-mail: info@volundvt.dk www.volundvt.dk

FI NIBE Energy Systems OY, Juurakkotie 3, 01510 Vantaa
Puh: 09-274 697 0 Fax: 09-274 697 40 E-mail: info@nibe.fi www.nibe.fi

FR AIT France, 10 rue des Moines, 67500 Haguenau
Tel : 03 88 06 24 10 Fax : 03 88 06 90 15 E-mail: info@nibe.fr www.nibe.fr

GB NIBE Energy Systems Ltd, 3C Broom Business Park, Bridge Way, Chesterfield S41 9QG
Tel: 0845 095 1200 Fax: 0845 095 1201 E-mail: info@nibe.co.uk www.nibe.co.uk

NL NIBE Energietechniek B.V., Postbus 634, NL 4900 AP Oosterhout, NETHERLANDS
Tel: 0168 477722 Fax: 0168 476998 E-mail: info@nibenl.nl www.nibenl.nl

NO ABK AS, Brobekkveien 80, 0582 Oslo, Postadresse: Postboks 64 Vollebekk, 0516 Oslo
Tel. sentralbord: +47 23 17 05 20 E-mail: post@abkklima.no www.nibeenergysystems.no

PL NIBE-BIAWAR Sp. z o. o. Aleja Jana Pawła II 57, 15-703 BIAŁYSTOK
Tel: 085 662 84 90 Fax: 085 662 84 14 E-mail: sekretariat@biawar.com.pl www.biawar.com.pl

RU © "EVAN" 17, per. Boynovskiy, Nizhny Novgorod
Tel./fax +7 831 419 57 06 E-mail: info@evan.ru www.nibe-evan.ru

NIBE AB Sweden, Box 14, Hannabadsvägen 5, SE-285 21 Markaryd
Tel: +46-(0)433-73 000 Fax: +46-(0)433-73 190 E-mail: info@nibe.se www.nibe.eu

NIBE